Section 10

Steam System Optimization – Condensate Recovery

BackPressure Turbine – PRV Operations
SSAT Turbine Projects Economics
Condensing Turbine Inpacts
SSAT Condensing Turbine Projects

UNIDO 2012, all rights reserved

Industrial Cogeneration

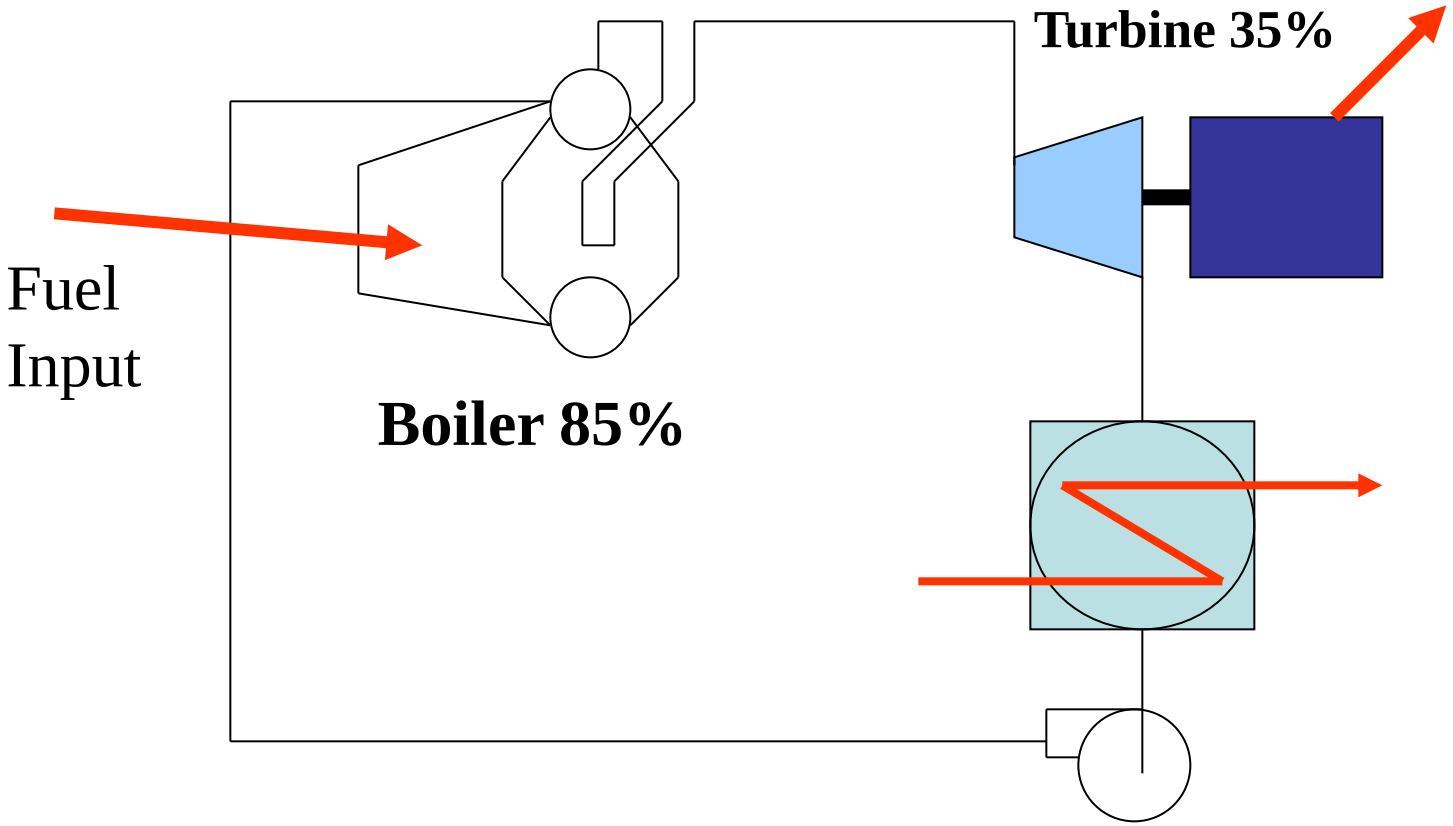

Industrial facilities can achieve "overall energy efficiency" of 70% or higher, because they have a need for thermal energy (heat)…….

UNIDO 2012, all rights reserved

Classic Cogeneration Analysis

- The classic cogeneration analysis answers the following questions:
  - What is the true economic impact of cogeneration?
  - When is it viable?
    - To operate or shut down
    - To install
  - What changes, if any, will be required on the steam system?
  - What changes, if any, will be required for the electrical utility system and grid interconnects?

UNIDO 2012, all rights reserved

Primary Factors for Cogeneration Analysis

- The primary factors impacting the analysis are:
  - *Impact* electrical cost
  - *Impact* fuel cost
  - Boiler efficiency
  - Steam turbine efficiency
  - Steam demand

UNIDO 2012, all rights reserved

Impact Costs

- *Impact cost* is the actual economic impact of increasing or decreasing electrical consumption
- The average cost of electricity is typically NOT the appropriate analysis value
- A thorough understanding of the electric rate structure is essential to evaluate the true impact of power generation systems

UNIDO 2012, all rights reserved

Example Turbine-PRV Evaluation

- A process unit is equipped with 6 identical pumps that are installed in parallel
  - Only 3 of the 6 pumps are required to operate continuously
    - The remaining pumps are spare (backup) units
  - Electric motors drive 4 of the pumps and steam turbines drive 2 of the pumps
    - 1 turbine-drive is being used at this time
- Identify the economic incentive associated with operating the second turbine
  - Compared to operating an electric motor driven pump and passing steam through a Pressure reducing Valve (PRV) to satisfy the low pressure demands

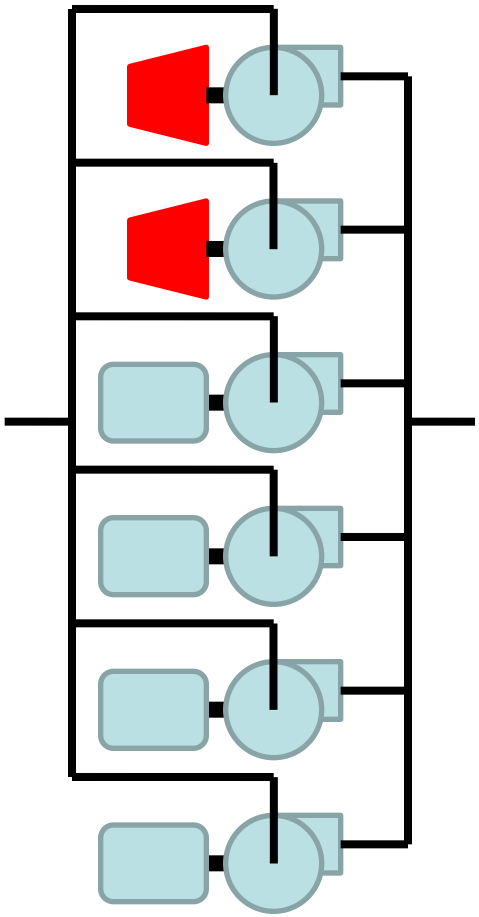

UNIDO 2012, all rights reserved

Steam System

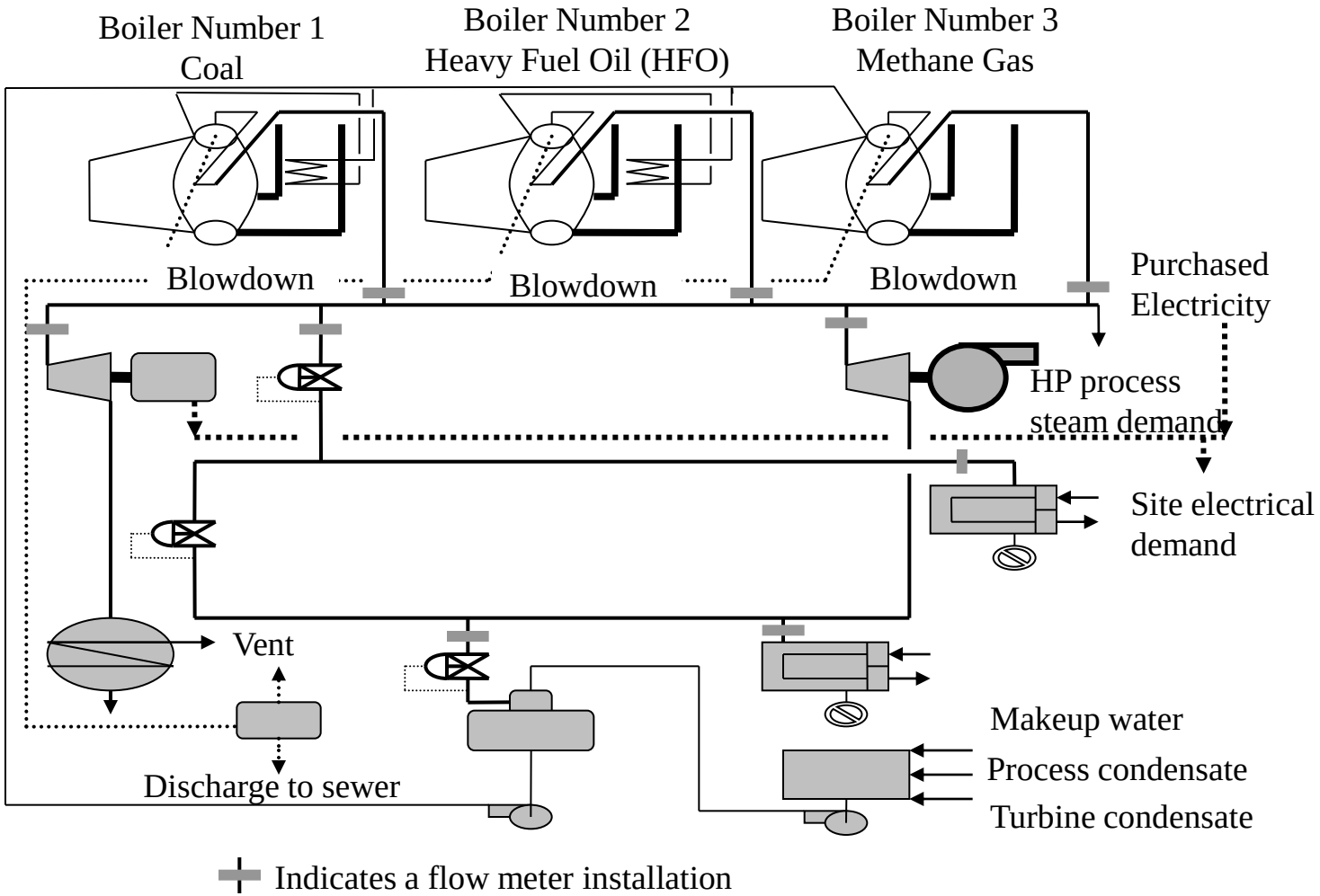

UNIDO 2012, all rights reserved

Turbine-PRV Economics

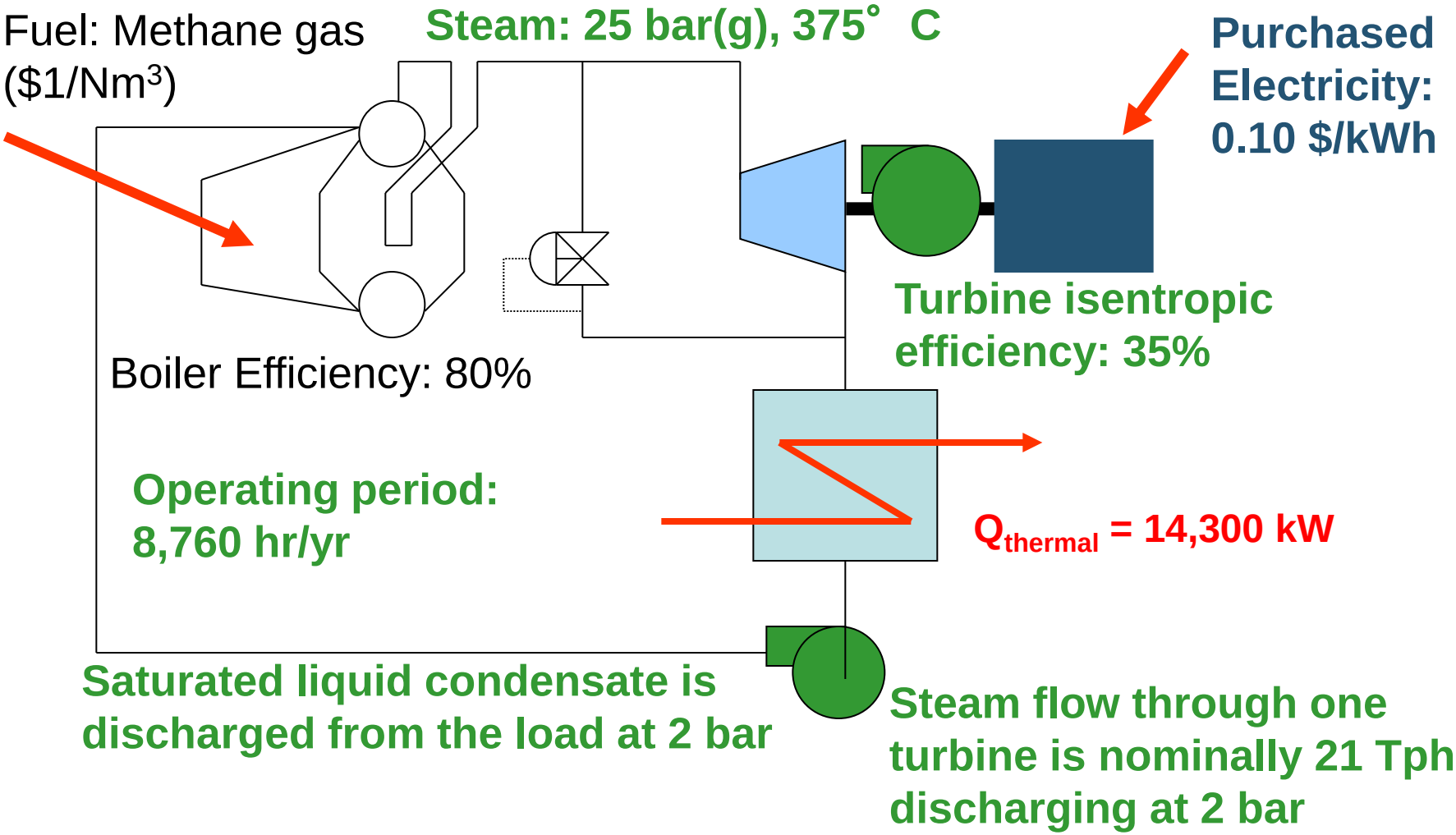

UNIDO 2012, all rights reserved

PRV Operations

$$h_{steam} = 3{,}180.9\,\frac{kJ}{kg}$$

P = 25 bars; T = 375° C

$$h_{PRVout} = 3{,}180.9\,\frac{kJ}{kg}$$

P = 2 bars; Isenthalpic; T = 354.7° C

$$h_{condensate} = 562.2\,\frac{kJ}{kg}$$

P = 2 bars; Saturated Condensate; T = 133.7° C

$$Q_{thermal} = 14{,}300\,kW$$

$$Q_{thermal} = m_{PRV} \times \left(h_{PRVout} - h_{condensate}\right)$$

$$m_{PRV} = \frac{14{,}300}{\left(3{,}180.9 - 562.2\right)} = 5.45\,\frac{kg}{s} = 19.63\,Tph$$

UNIDO 2012, all rights reserved

PRV Operations

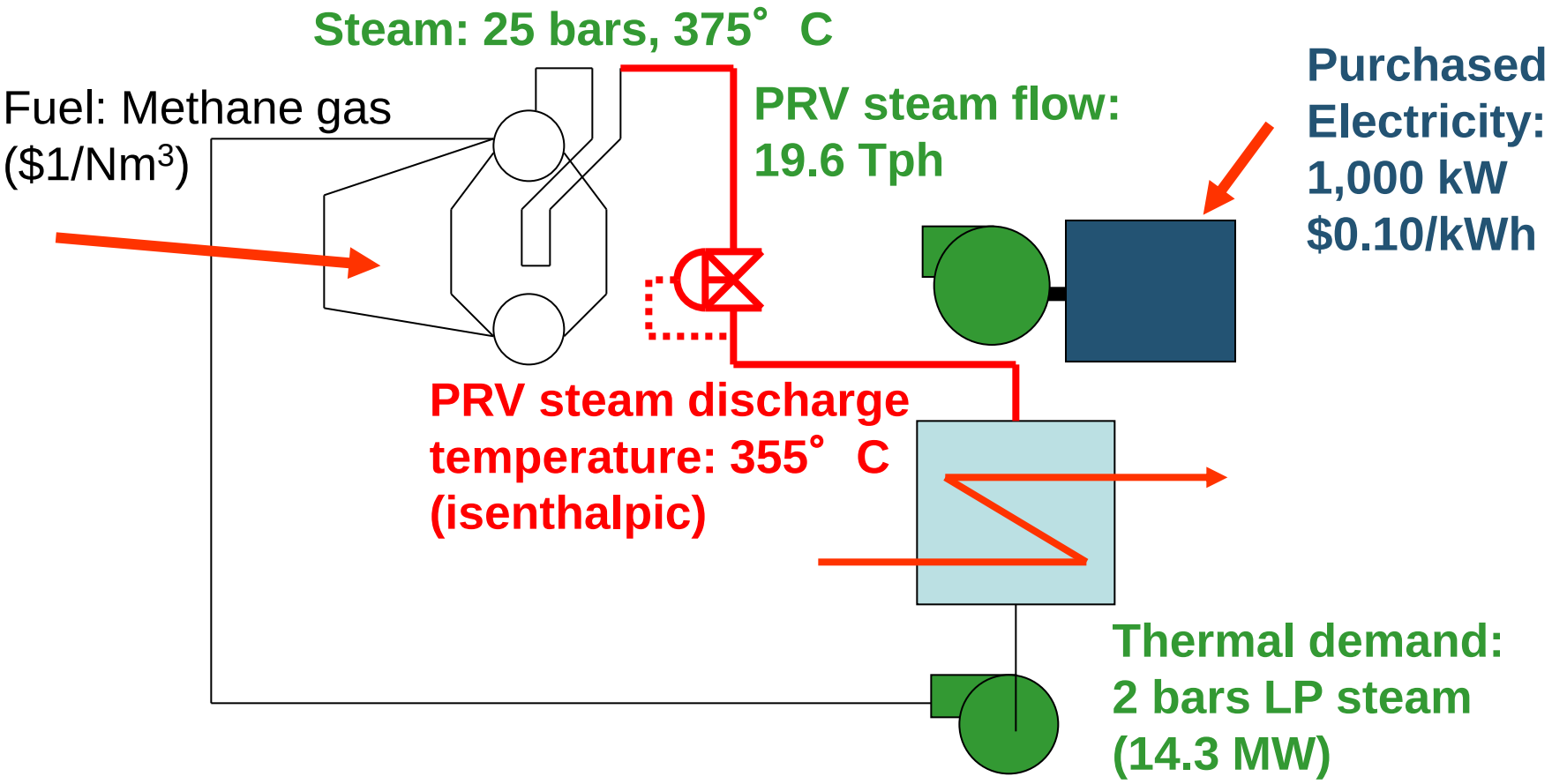

UNIDO 2012, all rights reserved

Backpressure Turbine Economics

- Most industrial systems require thermal energy (not mass flow of steam)
- The turbine will extract energy from the steam and convert it into shaft energy
  - The steam will exit the turbine with a reduced temperature
- The result will be an increased mass flow of steam required to satisfy the thermal demand

UNIDO 2012, all rights reserved

Steam Turbine Operations

$$h_{steam} = 3{,}180.9\,\frac{kJ}{kg}$$ P = 25 bars; T = 375° C

$$h_{Turbineout} = 3{,}009.8\,\frac{kJ}{kg}$$ P = 2 bars; T = 271° C

$$h_{condensate} = 562.2\,\frac{kJ}{kg}$$ P = 2 bars; Saturated Condensate; T = 133.7° C

$$Q_{thermal} = 14{,}300\,kW$$

$$Q_{thermal} = m_{turbine} \times \left(h_{Turbineout} - h_{condensate}\right)$$

$$m_{turbine} = \frac{14{,}300}{\left(3{,}009.8 - 562.2\right)} = 5.83\,\frac{kg}{s} = 21.0\,Tph$$

UNIDO 2012, all rights reserved

Steam Turbine Operation

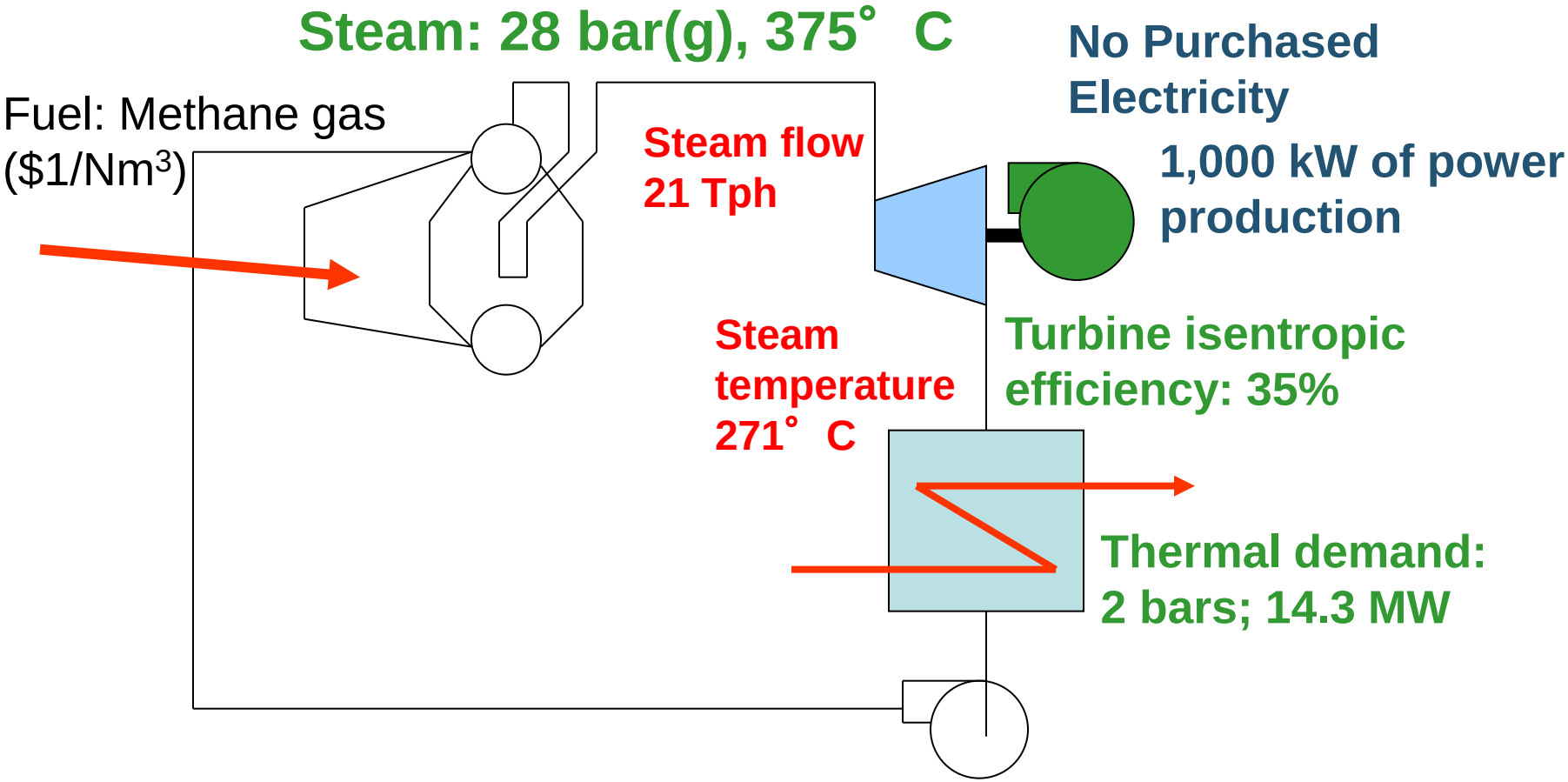

UNIDO 2012, all rights reserved

PRV - Backpressure Turbine Economics

- Electrical Energy and Cost Savings

$$Energy\ Savings = 1{,}000 \times 8{,}760 = 8{,}760\ MWh$$

$$Energy\ Cost\ Savings = 8{,}760 \times 1{,}000 \times 0.10 = \$876{,}000$$

- Fuel Energy and Cost Increase

$$Energy\ Increase = \left(m_{Turbine} - m_{PRV}\right) \times 1{,}000 \times \frac{\left(h_{steam} - h_{feedwater}\right)}{\eta_{boiler}} \times 8{,}760$$

$$Energy\ Increase = \left(21 - 19.6\right) \times 1{,}000 \times \frac{\left(3180.9 - 463.5\right)}{0.80} \times 8{,}760 = 41{,}658\ GJ$$

$$Energy\ Cost\ Increase = \frac{41{,}658 \times 1{,}000 \times 1000}{40{,}144} \times 1.00 = \$1{,}038{,}000$$

HHV of Methane

Cost of Methane

UNIDO 2012, all rights reserved

PRV - Backpressure Turbine Economics

- Net Economic Impact

$$\begin{aligned} &Electric\ Power\ Cost\ Savings = \$876{,}000 \\ &Fuel\ Cost\ Increase = \$1{,}038{,}000 \\ &Net\ Economic\ Benefit = -\$162{,}000 \end{aligned}$$

- The primary factors impacting the analysis are:
  - *Impact* electrical cost
  - *Impact* fuel cost
  - Boiler efficiency
  - Steam turbine efficiency
  - Steam demand

UNIDO 2012, all rights reserved

PRV - Backpressure Turbine Economics

- Net Economic Impact

$$Electric\ Power\ Cost\ Savings = \$876{,}000$$
$$Fuel\ Cost\ Increase = \$1{,}038{,}000$$
$$Net\ Economic\ Benefit = -\$162{,}000$$

- This identical analysis can be and should be done with SSAT Projects 7, 8 and 9 depending on which turbine is being modeled in the analysis
  - Systems approach versus Component-based approach

UNIDO 2012, all rights reserved

SSAT Project 7 – HP-LP Steam Turbine

Project 7 - HP to LP Steam Turbine(s)
Efficiency : 35% Operation : Operates with fixed steam flow

Do you wish to modify the HP to LP turbine operation?	No
If yes, select the appropriate turbine operating mode	Option 2 - Fixed operation

Note: If Option 1 is chosen, the model will preferentially use the HP to LP turbine to balance the LP demand

Specify a new isentropic efficiency (%)	35 %	

Note: A generator electrical efficiency of 100% is assumed by the model
Note: Isentropic efficiency of existing turbine is 35%

Option 2 - How do wish to define the fixed turbine operation?	Specify fixed steam flow

Option 2 - Fixed steam flow	42 t/h	
Option 2 - Fixed power generation	2000 kW	

Option 3 - How do wish to define the operating range?	Option 3 not selected

Option 3 - Minimum steam flow Option 3 - Maximum steam flow	25 t/h 75 t/h	
Option 3 - Minimum power generation Option 3 - Maximum power generation	1500 kW 2500 kW	

UNIDO 2012, all rights reserved

SSAT Project 8 – HP-MP Steam Turbine

Project 8 - HP to MP Steam Turbine(s) Not installed		
Do you wish to add an HP to MP turbine?		No
If yes, select the appropriate turbine operating mode		Option 1 - Balances MP header
Specify a new isentropic efficiency (%)	70 %	

Note: A generator electrical efficiency of 100% is assumed by the model

Option 2 - How do wish to define the fixed turbine operation?		Option 2 not selected
Option 2 - Fixed steam flow	50 t/h	
Option 2 - Fixed power generation	2000 kW	
Option 3 - How do wish to define the operating range?		Option 3 not selected
Option 3 - Minimum steam flow	25 t/h	
Option 3 - Maximum steam flow	75 t/h	
Option 3 - Minimum power generation	1500 kW	
Option 3 - Maximum power generation	2500 kW	

UNIDO 2012, all rights reserved

SSAT Project 9 – MP-LP Steam Turbine

Project 8 - HP to MP Steam Turbine(s) Not installed		
Do you wish to add an HP to MP turbine?		No
If yes, select the appropriate turbine operating mode		Option 1 - Balances MP header
Specify a new isentropic efficiency (%)	70 %	

Note: A generator electrical efficiency of 100% is assumed by the model

Option 2 - How do wish to define the fixed turbine operation?		Option 2 not selected
Option 2 - Fixed steam flow	50 t/h	
Option 2 - Fixed power generation	2000 kW	
Option 3 - How do wish to define the operating range?		Option 3 not selected
Option 3 - Minimum steam flow	25 t/h	
Option 3 - Maximum steam flow	75 t/h	
Option 3 - Minimum power generation	1500 kW	
Option 3 - Maximum power generation	2500 kW	

UNIDO 2012, all rights reserved

SSAT Analysis – HP-LP Steam Turbine

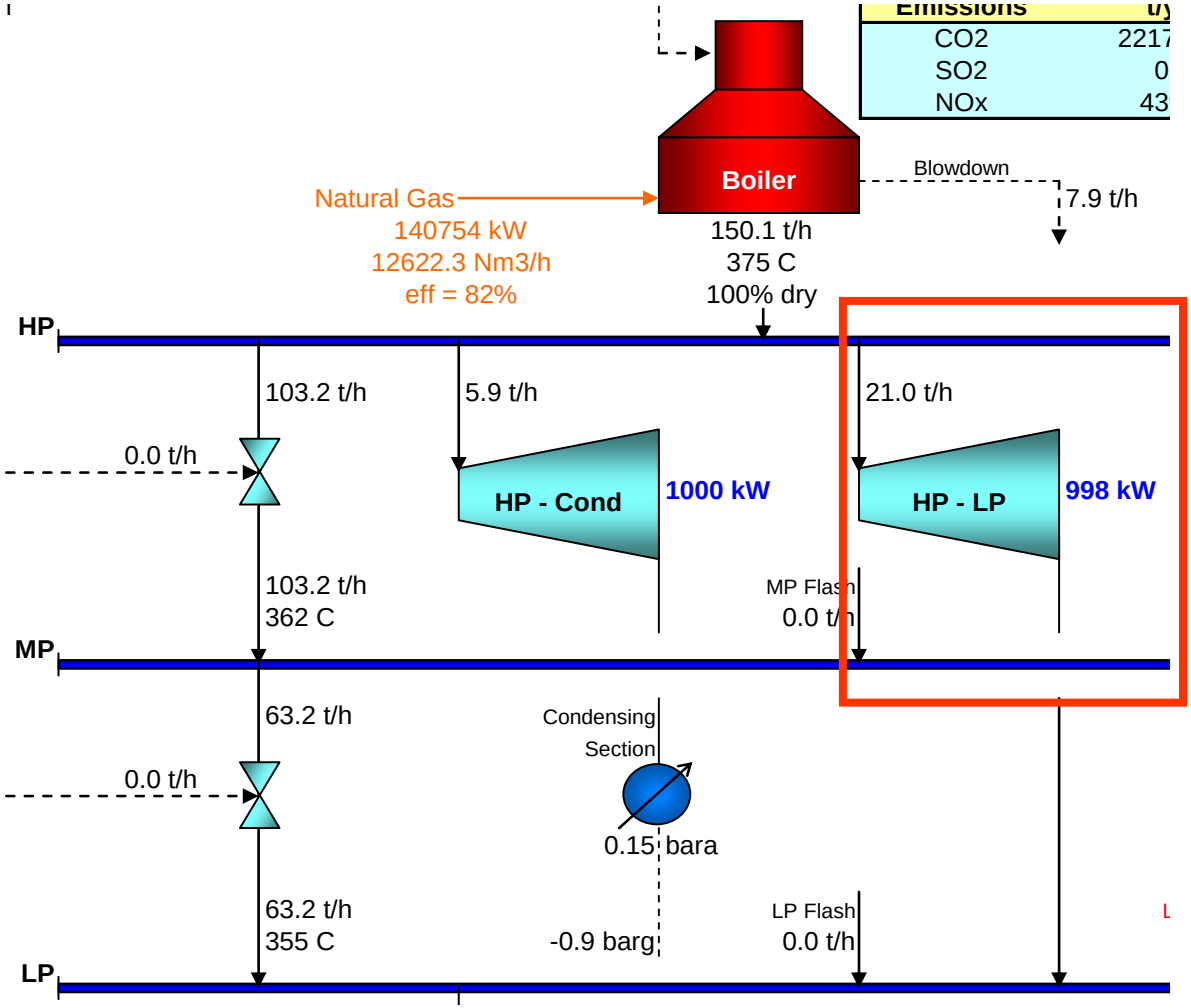

SSAT - Shaft Power (Generator Efficiency = 100%)

UNIDO 2012, all rights reserved

SSAT Project 7 – HP-LP Steam Turbine

Project 7 - HP to LP Steam Turbine(s)
Efficiency : 35% Operation : Operates with fixed steam flow

Do you wish to modify the HP to LP turbine operation?		Yes, modify operation of existing turbine
→ If yes, select the appropriate turbine operating mode		Option 2 - Fixed operation ←

Note: If Option 1 is chosen, the model will preferentially use the HP to LP turbine to balance the LP demand

→ Specify a new isentropic efficiency (%)	35 %	←

Note: A generator electrical efficiency of 100% is assumed by the model
Note: Isentropic efficiency of existing turbine is 35%

→ **Option 2** - How do wish to define the fixed turbine operation?		Specify fixed steam flow ←
→ **Option 2** - Fixed steam flow	42 t/h	←
Option 2 - Fixed power generation	2000 kW	
Option 3 - How do wish to define the operating range?		Option 3 not selected
Option 3 - Minimum steam flow	25 t/h	
Option 3 - Maximum steam flow	75 t/h	
Option 3 - Minimum power generation	1500 kW	
Option 3 - Maximum power generation	2500 kW	

UNIDO 2012, all rights reserved

SSAT Project 7 – HP-LP Steam Turbine

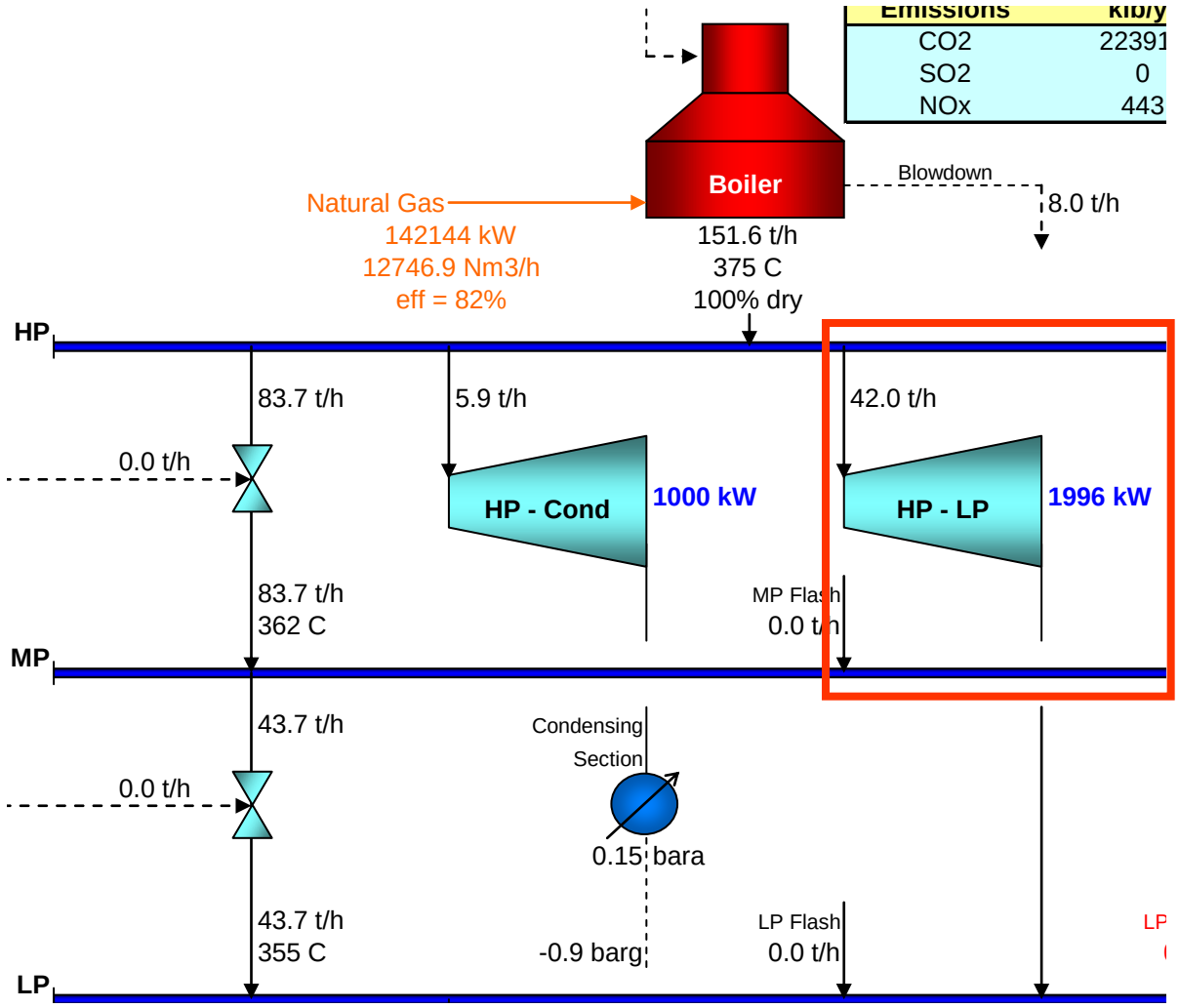

SSAT - Shaft Power (Gen Efficiency = 100%)

UNIDO 2012, all rights reserved

SSAT Project 7 – HP-LP Steam Turbine

Results Summary

SSAT 3 Header Experts Training Example

Model Status : OK

Cost Summary ($ '000s/yr)	Current Operation	After Projects	Reduction	
Power Cost	4,380	3,506	874	20.0%
Fuel Cost	110,572	111,663	-1,091	-1.0%
Make-Up Water Cost	421	425	-4	-0.9%
Total Cost (in $ '000s/yr)	**115,373**	**115,594**	**-221**	**-0.2%**

On-Site Emissions	Current Operation	After Projects	Reduction	
CO2 Emissions	221726 t/yr	223914 t/yr	-2188 t/yr	-1.0%
SOx Emissions	0 t/yr	0 t/yr	0 t/yr	N/A
NOx Emissions	439 t/yr	443 t/yr	-4 t/yr	-1.0%

Power Station Emissions	Reduction After Projects	Total Reduction	
CO2 Emissions	6225 t/yr	4036 t/yr	-
SOx Emissions	19 t/yr	19 t/yr	-
NOx Emissions	14 t/yr	10 t/yr	-

Note - Calculates the impact of the change in site power import on emissions from an external power station. Total reduction values are for site + power station

Utility Balance	Current Operation	After Projects	Reduction	
Power Generation	1998 kW	2996 kW	-	-
Power Import	5000 kW	4002 kW	998 kW	20.0%
Total Site Electrical Demand	6998 kW	6998 kW	-	-
Boiler Duty	140754 kW	142144 kW	-1389 kW	-1.0%
Fuel Type	Natural Gas	Natural Gas	-	-
Fuel Consumption	12622.3 Nm3/h	12746.9 Nm3/h	-124.6 Nm3/h	-1.0%
Boiler Steam Flow	150.1 t/h	151.6 t/h	-1.5 t/h	-1.0%
Fuel Cost (in $/MWh)	89.68	89.68	-	-
Power Cost (as $/MWh)	100.00	100.00	-	-
Make-Up Water Flow	73 m3/h	74 m3/h	-1 m3/h	-0.9%

UNIDO 2012, all rights reserved

SSAT Project 7 – HP-LP Steam Turbine

- Differences between the “Manual” versus “Model” calculated results can be significant when working with cogeneration type projects
- The Model results are very accurate
  - Uses a SYSTEM approach and not just a component
    - Impact of condensate temperature
    - Impact of blowdown, deaerator steam flow, make-up water, etc.
  - Completes a detailed mass, energy and economic balance
- ALWAYS use a SYSTEM based model for analysis

UNIDO 2012, all rights reserved

Electrical Price Impact

- Electrical price is increased from 0.10 $/kWh to 0.125 $/kWh

Results Summary

SSAT 3 Header Experts Training Example

Model Status : OK

Cost Summary ($ '000s/yr)	Current Operation	After Projects	Reduction	
Power Cost	5,475	4,382	1,093	20.0%
Fuel Cost	110,572	111,663	-1,091	-1.0%
Make-Up Water Cost	421	425	-4	-0.9%
Total Cost (in $ '000s/yr)	**116,468**	**116,470**	**-2**	**0.0%**

Utility Balance	Current Operation	After Projects	Reduction	
Power Generation	0 kW	998 kW	-	-
Power Import	5000 kW	4002 kW	998 kW	20.0%
Total Site Electrical Demand	5000 kW	5000 kW	-	-
Boiler Duty	140753 kW	142144 kW	-1392 kW	-1.0%
Fuel Type	Natural Gas	Natural Gas	-	-
Fuel Consumption	12622.2 Nm3/h	12747 Nm3/h	-124.8 Nm3/h	-1.0%
Boiler Steam Flow	150.1 t/h	151.6 t/h	-1.5 t/h	-1.0%
Fuel Cost (in $/MWh)	89.68	89.68	-	-
Power Cost (as $/MWh)	125.00	125.00	-	-
Make-Up Water Flow	76 m3/h	77 m3/h	-1 m3/h	-0.9%

UNIDO 2012, all rights reserved

Fuel Price Impact

- Fuel price is reduced from 1.0 $/Nm^3 ($25 per GJ) to $0.5 $/Nm^3 ($12.5 per GJ)

Results Summary

SSAT 3 Header Experts Training Example

Model Status : OK

Cost Summary ($ '000s/yr)	Current Operation	After Projects	Reduction	
Power Cost	4,380	3,506	874	20.0%
Fuel Cost	55,286	55,831	-546	-1.0%
Make-Up Water Cost	421	425	-4	-0.9%
Total Cost (in $ '000s/yr)	**60,087**	**59,763**	**325**	**0.5%**

Utility Balance	Current Operation	After Projects	Reduction	
Power Generation	0 kW	998 kW	-	-
Power Import	5000 kW	4002 kW	998 kW	20.0%
Total Site Electrical Demand	5000 kW	5000 kW	-	-
Boiler Duty	140753 kW	142144 kW	-1392 kW	-1.0%
Fuel Type	Natural Gas	Natural Gas	-	-
Fuel Consumption	12622.2 Nm3/h	12747 Nm3/h	-124.8 Nm3/h	-1.0%
Boiler Steam Flow	150.1 t/h	151.6 t/h	-1.5 t/h	-1.0%
Fuel Cost (in $/MWh)	44.84	44.84	-	-
Power Cost (as $/MWh)	100.00	100.00	-	-
Make-Up Water Flow	76 m3/h	77 m3/h	-1 m3/h	-0.9%

UNIDO 2012, all rights reserved

Fuel Impact

- Impact fuel is now coal at a price of $170 per tonne ($5.4 per GJ) instead of methane gas (1.0 $/Nm^3; $25.0 per GJ)
- Boiler efficiency is now 86.7% (for coal) versus 81.7% (for methane gas)

Cost Summary ($ '000s/yr)	Current Operation	After Projects	Reduction	
Power Cost	4,380	3,506	874	20.0%
Fuel Cost	22,299	22,519	-220	-1.0%
Make-Up Water Cost	421	425	-4	-0.9%
Total Cost (in $ '000s/yr)	**27,101**	**26,450**	**650**	**2.4%**

On-Site Emissions	Current Operation	After Projects	Reduction	
CO2 Emissions	360803 t/yr	364364 t/yr	-3561 t/yr	-1.0%
SOx Emissions	2621 t/yr	2647 t/yr	-26 t/yr	-1.0%
NOx Emissions	1007 t/yr	1017 t/yr	-10 t/yr	-1.0%

Power Station Emissions	Reduction After Projects	Total Reduction	
CO2 Emissions	6225 t/yr	2664 t/yr	-
SOx Emissions	19 t/yr	-7 t/yr	-
NOx Emissions	14 t/yr	4 t/yr	-

Note - Calculates the impact of the change in site power import on emissions from an external power station. Total reduction values are for site + power station

Utility Balance	Current Operation	After Projects	Reduction	
Power Generation	1998 kW	2996 kW	-	-
Power Import	5000 kW	4002 kW	998 kW	20.0%
Total Site Electrical Demand	6998 kW	6998 kW	-	-
Boiler Duty	132645 kW	133954 kW	-1309 kW	-1.0%
Fuel Type	Typical Eastern Coal (Bituminous)	Typical Eastern Coal (Bituminous)	-	-
Fuel Consumption	15 t/h	15.1 t/h	-0.1 t/h	-0.7%
Boiler Steam Flow	150.1 t/h	151.6 t/h	-1.5 t/h	-1.0%
Fuel Cost (in $/MWh)	19.19	19.19	-	-
Power Cost (as $/MWh)	100.00	100.00	-	-
Make-Up Water Flow	73 m3/h	74 m3/h	-1 m3/h	-0.9%

UNIDO 2012, all rights reserved

Improved Turbine Efficiency

- The isentropic turbine efficiency is now 65% instead of 35%

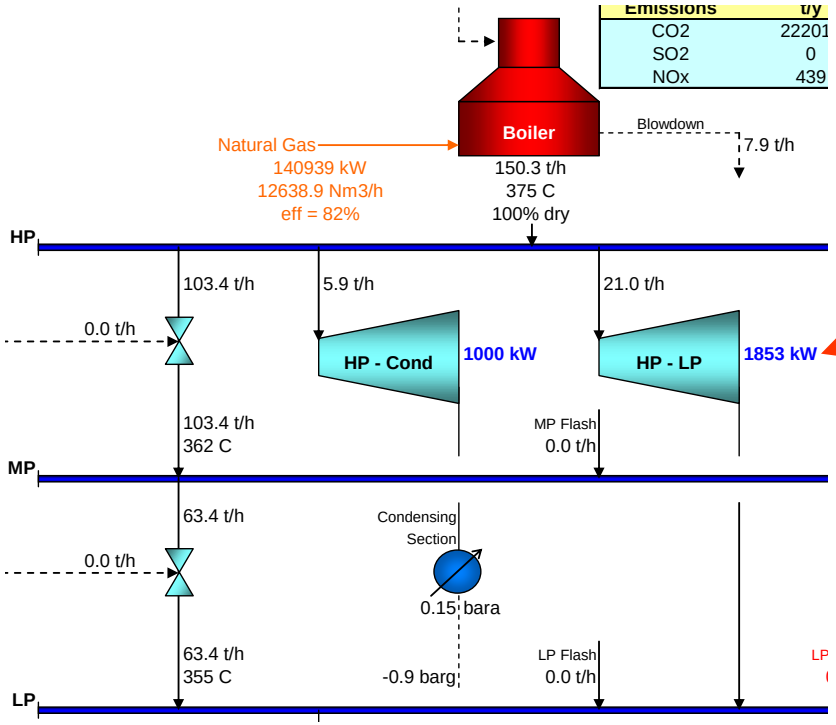

Power produced is >>1,000 kW

- Higher efficiency turbine extracts more power out of the steam thereby reducing steam enthalpy at the exhaust
  - Resulting in more steam to be generated by the boilers!

UNIDO 2012, all rights reserved

Improved Turbine Efficiency

- The isentropic turbine efficiency is now 65% instead of 35%

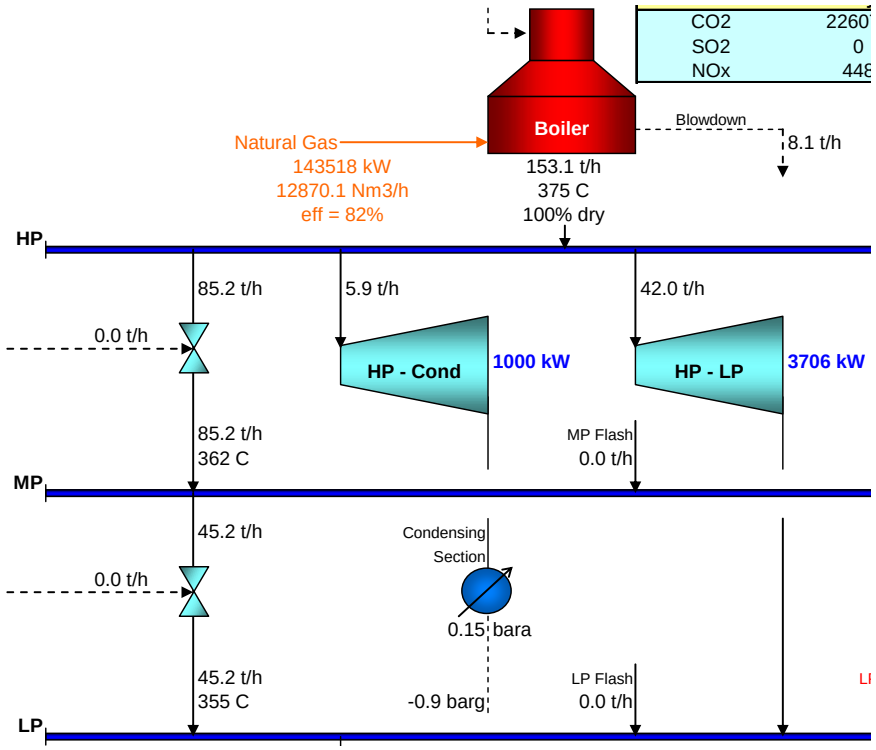

Power produced is >>1,000 kW

- Higher efficiency turbine extracts more power out of the steam thereby reducing steam enthalpy at the exhaust
  - Resulting in more steam to be generated by the boilers!

UNIDO 2012, all rights reserved

Improved Turbine Efficiency

- The isentropic turbine efficiency is now 65% instead of 35%

Cost Summary ($ '000s/yr)	Current Operation	After Projects	Reduction	
Power Cost	4,380	2,757	1,623	37.1%
Fuel Cost	110,716	112,742	-2,026	-1.8%
Make-Up Water Cost	422	428	-7	-1.6%
Total Cost (in $ '000s/yr)	**115,518**	**115,927**	**-409**	**-0.4%**

On-Site Emissions	Current Operation	After Projects	Reduction	
CO2 Emissions	222016 t/yr	226078 t/yr	-4062 t/yr	-1.8%
SOx Emissions	0 t/yr	0 t/yr	0 t/yr	N/A
NOx Emissions	439 t/yr	448 t/yr	-8 t/yr	-1.8%

Power Station Emissions	Reduction After Projects	Total Reduction	
CO2 Emissions	11561 t/yr	7498 t/yr	-
SOx Emissions	36 t/yr	36 t/yr	-
NOx Emissions	26 t/yr	18 t/yr	-

Note - Calculates the impact of the change in site power import on emissions from an external power station. Total reduction values are for site + power station

Utility Balance	Current Operation	After Projects	Reduction	
Power Generation	2853 kW	4706 kW	-	-
Power Import	5000 kW	3147 kW	1853 kW	37.1%
Total Site Electrical Demand	7853 kW	7853 kW	-	-
Boiler Duty	140939 kW	143518 kW	-2579 kW	-1.8%
Fuel Type	Natural Gas	Natural Gas	-	-
Fuel Consumption	12638.9 Nm3/h	12870.1 Nm3/h	-231.2 Nm3/h	-1.8%
Boiler Steam Flow	150.3 t/h	153.1 t/h	-2.8 t/h	-1.8%
Fuel Cost (in $/MWh)	89.68	89.68	-	-
Power Cost (as $/MWh)	100.00	100.00	-	-
Make-Up Water Flow	73 m3/h	74 m3/h	-1 m3/h	-1.6%

UNIDO 2012, all rights reserved

Turbine-PRV Examples Summary Information

- These examples indicate the critical importance of impact parameter accuracy

Power Cost ($/kWh)	Fuel Cost ($/GJ)	Turbine Efficiency (%)	SSAT Boiler Efficiency (%)	Additional Power (kW)	Additional Steam (Tph)	Cost Savings ($K/yr)
0.100	25.0	35.0	81.7	998	1.5	**(221)**
0.125	25.0	35.0	81.7	998	1.5	**(2)**
0.100	12.5	35.0	81.7	998	1.5	**325**
0.100	5.4	35.0	86.7	998	1.5	**650**
0.100	25.0	65.0	81.7	1,853	2.8	**(409)**

- It is VERY IMPORTANT to conduct this analysis for each facility
  - Each facility is unique and will need significant due diligence before implementation of these projects

UNIDO 2012, all rights reserved

Backpressure Turbine Economics

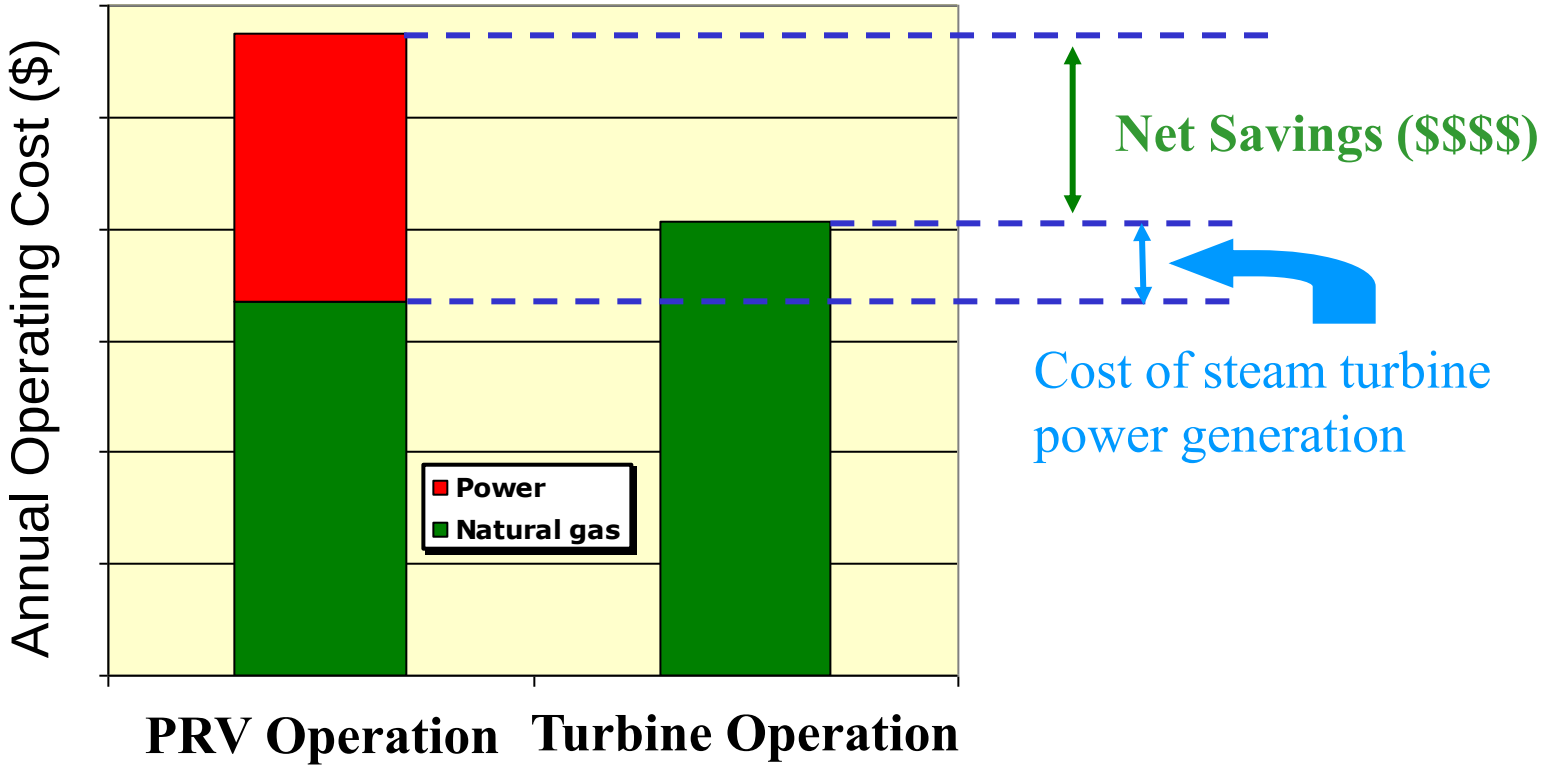

UNIDO 2012, all rights reserved

Variables for Industrial Applications

- Constant steam flow
- High pressure supply steam
- Existing Pressure Reducing Valve (PRV)
- Multiple steam header system
- Simultaneous steam and electric (power) demand
- High run hours

UNIDO 2012, all rights reserved

Key Points / Action Items

1. *Backpressure turbines are used instead of pressure letdown stations*
2. *Turbine efficiency is NOT 1st law efficiency but a comparison of actual turbine versus an ideal turbine*
3. *Continuous operations with a simultaneous thermal and electric demand are good candidates for backpressure turbines*
4. *Each facility analysis is unique and will depend on several economic as well as operating factors*
5. *Turbine analysis will need a solid thermodynamic steam system model*

UNIDO 2012, all rights reserved

Condensing Steam Turbines

- Condensing turbine discharge steam pressure is less than atmospheric pressure
  - The steam must be condensed to pump it back into the boiler
  - Exiting steam quality is typically much greater than 90%

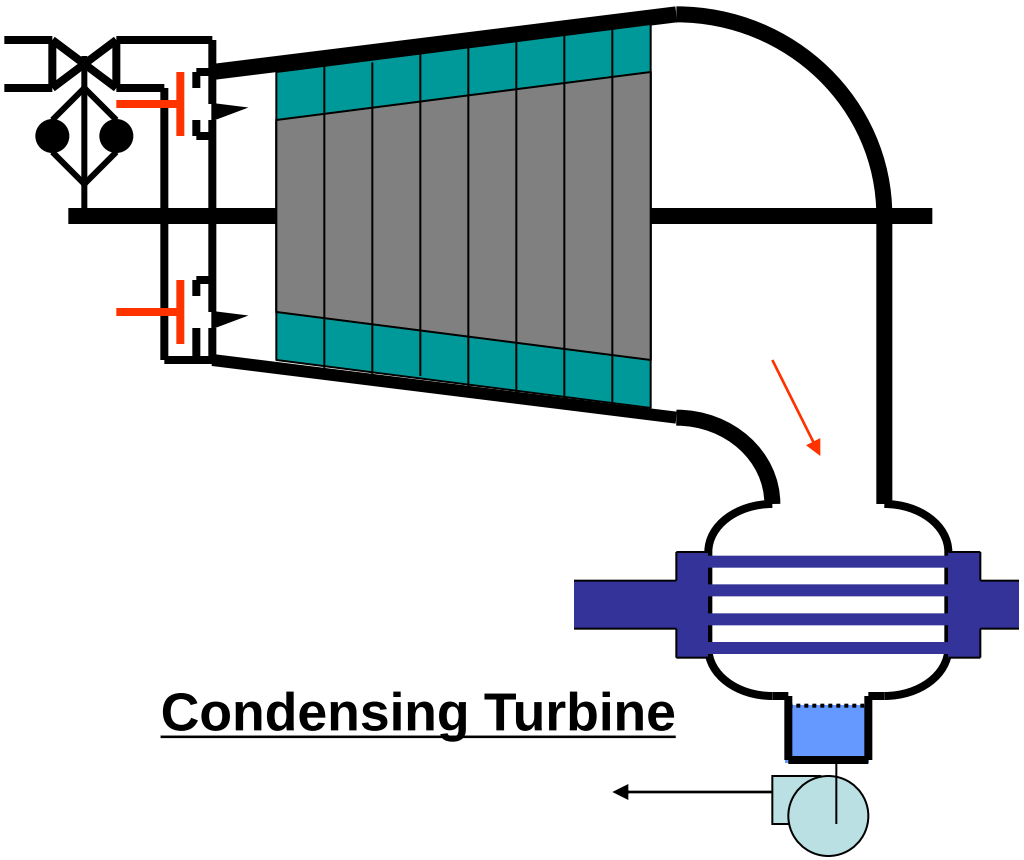

Source: US DOE ITP Steam BestPractices Program

UNIDO 2012, all rights reserved

Condensing Steam Turbines

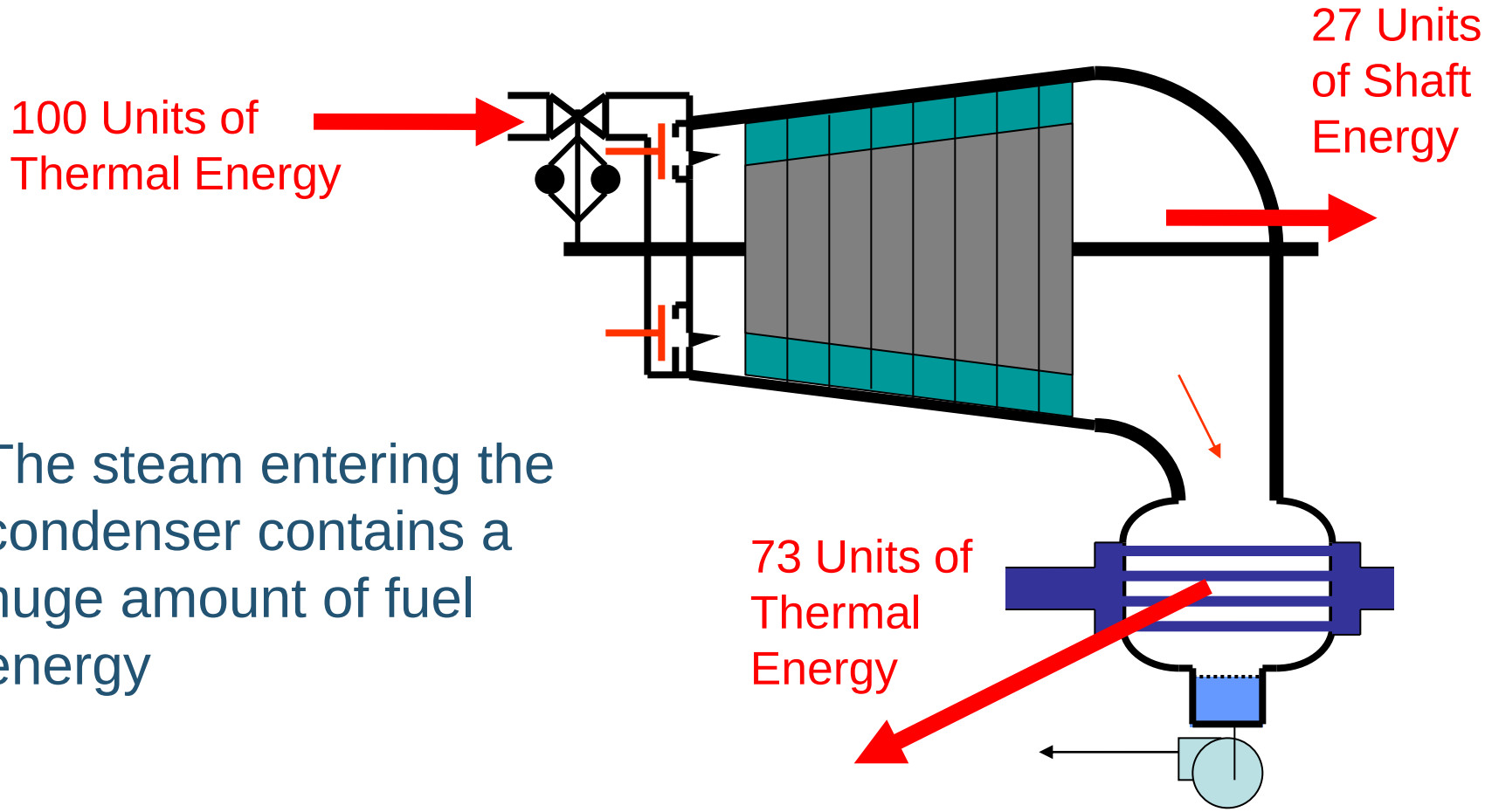

- The steam entering the condenser contains a huge amount of fuel energy

Condensing Turbine

Source: US DOE ITP Steam BestPractices Program

UNIDO 2012, all rights reserved

Condensing Steam Turbines

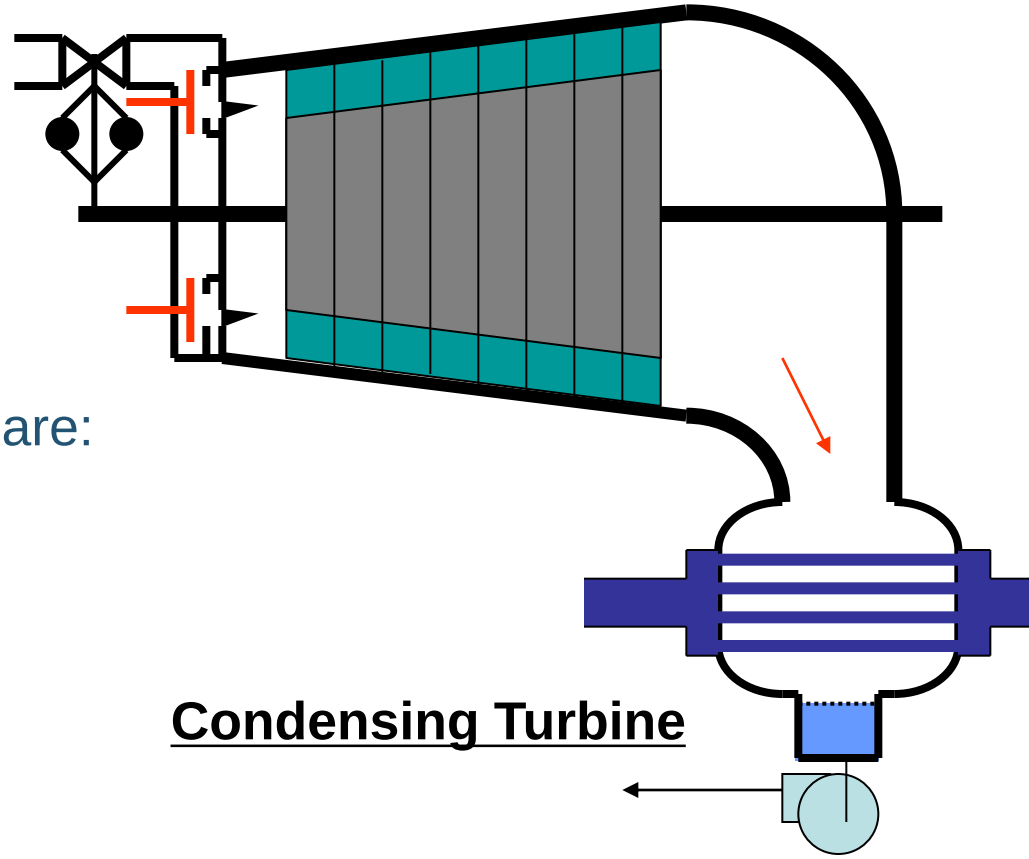

Condensing Turbine

- The primary factors influencing condensing turbine operations are:
  - **Purchased power cost**
  - **Purchased fuel cost**
  - **Turbine efficiency**
  - Boiler efficiency
  - Turbine discharge pressure

UNIDO 2012, all rights reserved

Condensing Steam Turbines

- Efficiency reductions can result from:
  - Blade deposits
  - Blade erosion
  - Seal wear
  - Wet steam
  - Throttling
- Efficiency improvements can result from
  - Replaced blades
  - Improved seals
  - Turbine replacement
  - Increased load

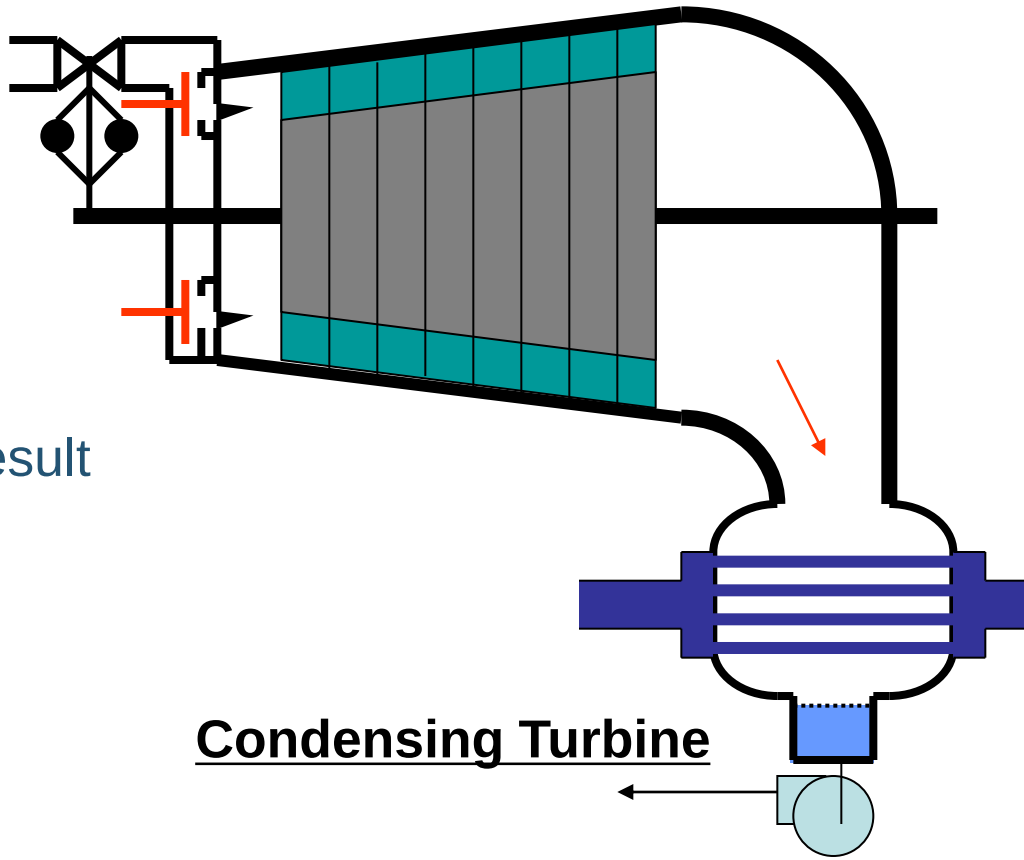

Source: US DOE ITP Steam BestPractices Program

UNIDO 2012, all rights reserved

Condensing Steam Turbines

- Condenser pressure can be reduced (improved) by
  - Removing non-condensable gases from condenser
  - Cleaning the condenser
  - Supplying the condenser with reduced temperature water
  - Supplying the condenser with additional cooling water

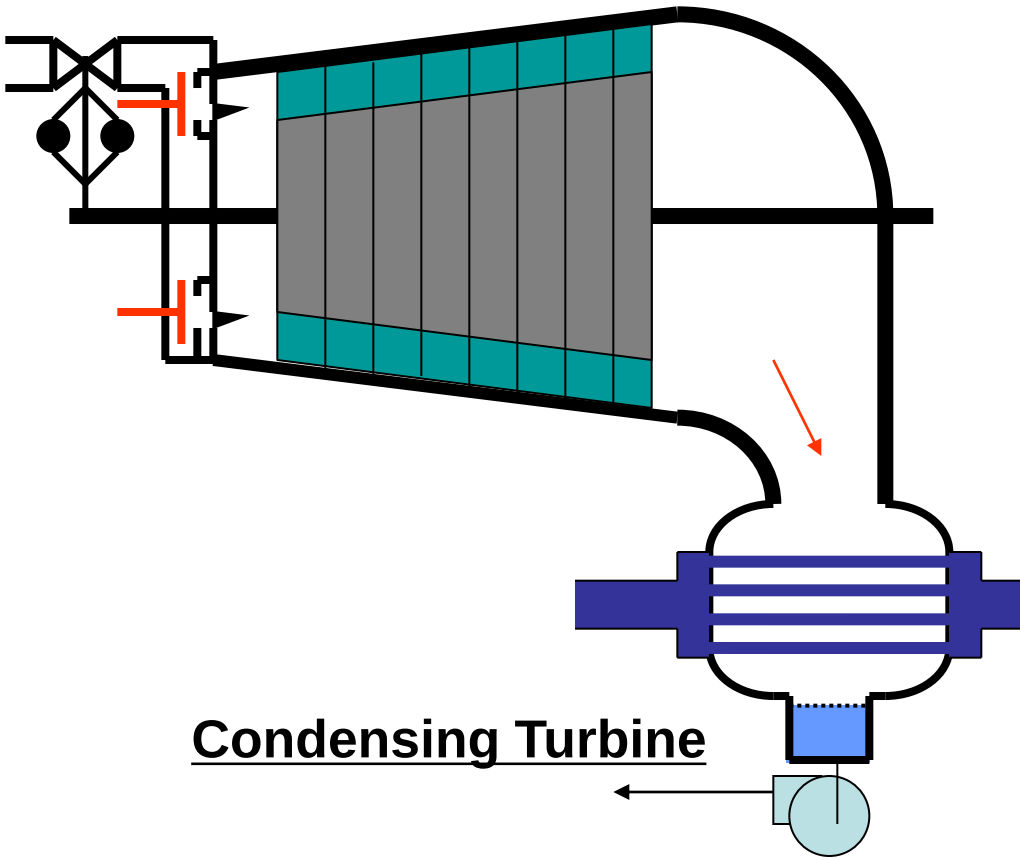

Source: US DOE ITP Steam BestPractices Program

UNIDO 2012, all rights reserved

Steam System

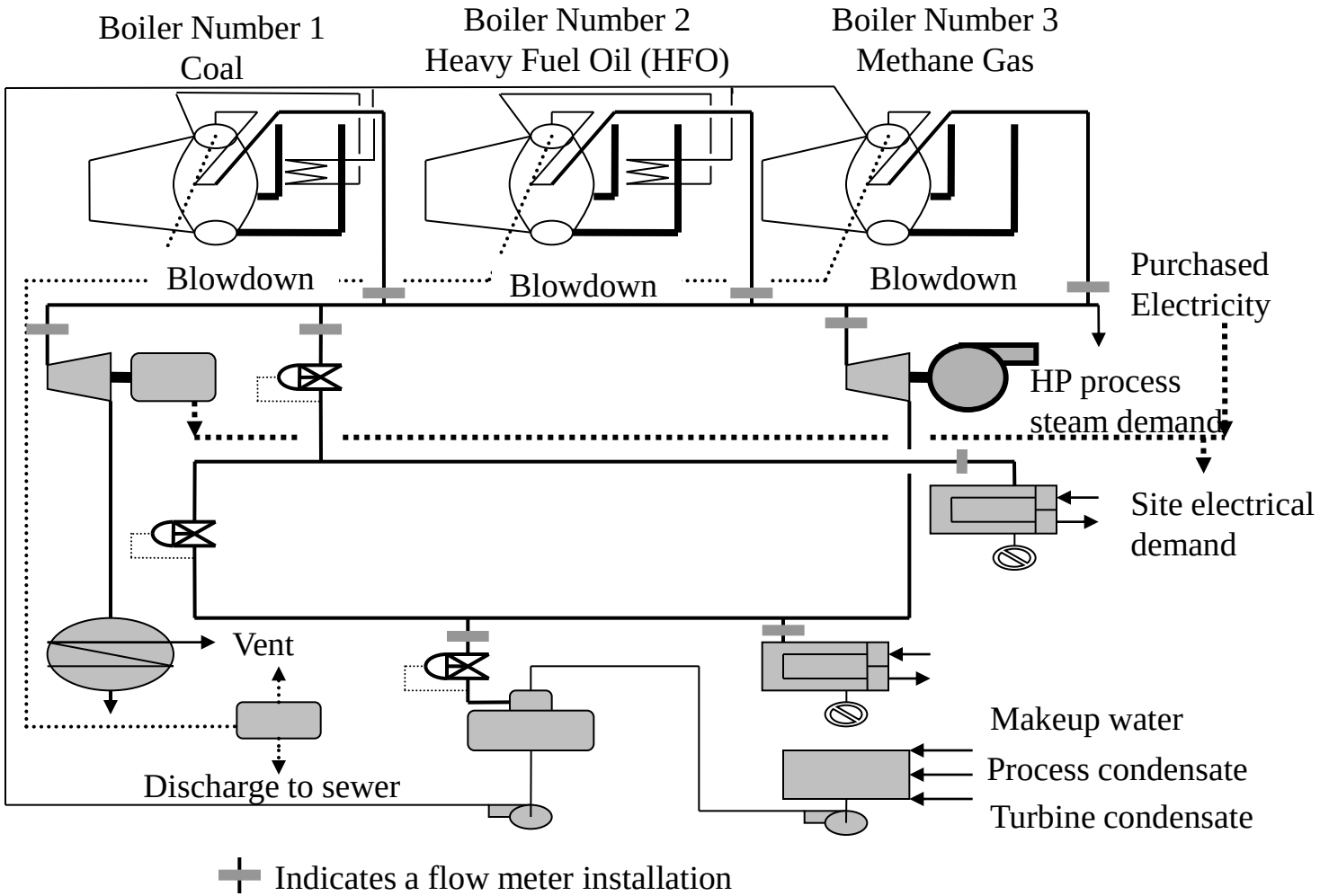

UNIDO 2012, all rights reserved

SSAT Project 10 – Condensing Steam Turbines

Project 10 - HP to Condensing Steam Turbine(s)
Efficiency : 65% Operation : Operates at fixed power generation

Do you wish to modify the HP to condensing turbine operation?		No, maintain current operation
If yes, enter a new isentropic efficiency (%)	70 %	

Note: A generator electrical efficiency of 100% is assumed by the model
Note: Isentropic efficiency of existing turbine is 65%

If yes, select the units to specify the condenser pressure		bara
New condenser pressure (bara)	0.15	

Note: Existing condenser pressure is 0.15 bara

If yes, select the new mode of operation		Option 1 - Fixed power generation
Option 1 - Fixed power generation	1000 kW	
Option 2 - Fixed steam flow	25 t/h	

- Implementing SSAT Project 10 will involve a major change in steam demand
  - Be very careful while evaluating this project

UNIDO 2012, all rights reserved

SSAT Project 10 - Condensing Steam Turbines

- SSAT allows
  - The addition of a condensing turbine
  - Modification of major aspects of an existing turbine
    - Isentropic efficiency
    - Discharge pressure
    - Load
      - Flow
      - Power
  - Elimination of the operation of a turbine

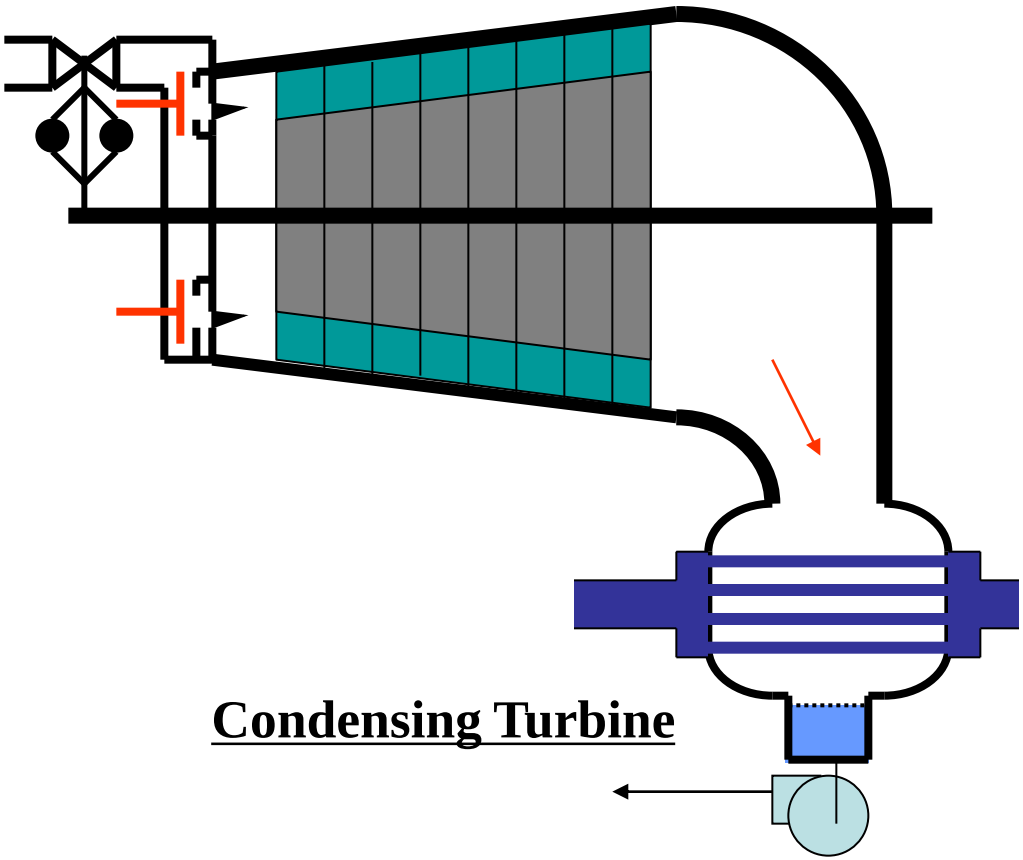

UNIDO 2012, all rights reserved

SSAT Project 10 - Condensing Steam Turbines

Project 10 - HP to Condensing Steam Turbine(s) Efficiency : 65% Operation : Operates at fixed power generation		
Do you wish to modify the HP to condensing turbine operation?		Yes, switch off existing turbine
If yes, enter a new isentropic efficiency (%)	70 %	

Note: A generator electrical efficiency of 100% is assumed by the model

Note: Isentropic efficiency of existing turbine is 65%

If yes, select the units to specify the condenser pressure		bara
New condenser pressure (bara)	0.15	

Note: Existing condenser pressure is 0.15 bara

If yes, select the new mode of operation		Not installed
Option 1 - Fixed power generation	1000 kW	
Option 2 - Fixed steam flow	25 t/h	

- Impact of switching off the condensing turbine

UNIDO 2012, all rights reserved

SSAT Project 10 - Condensing Steam Turbines

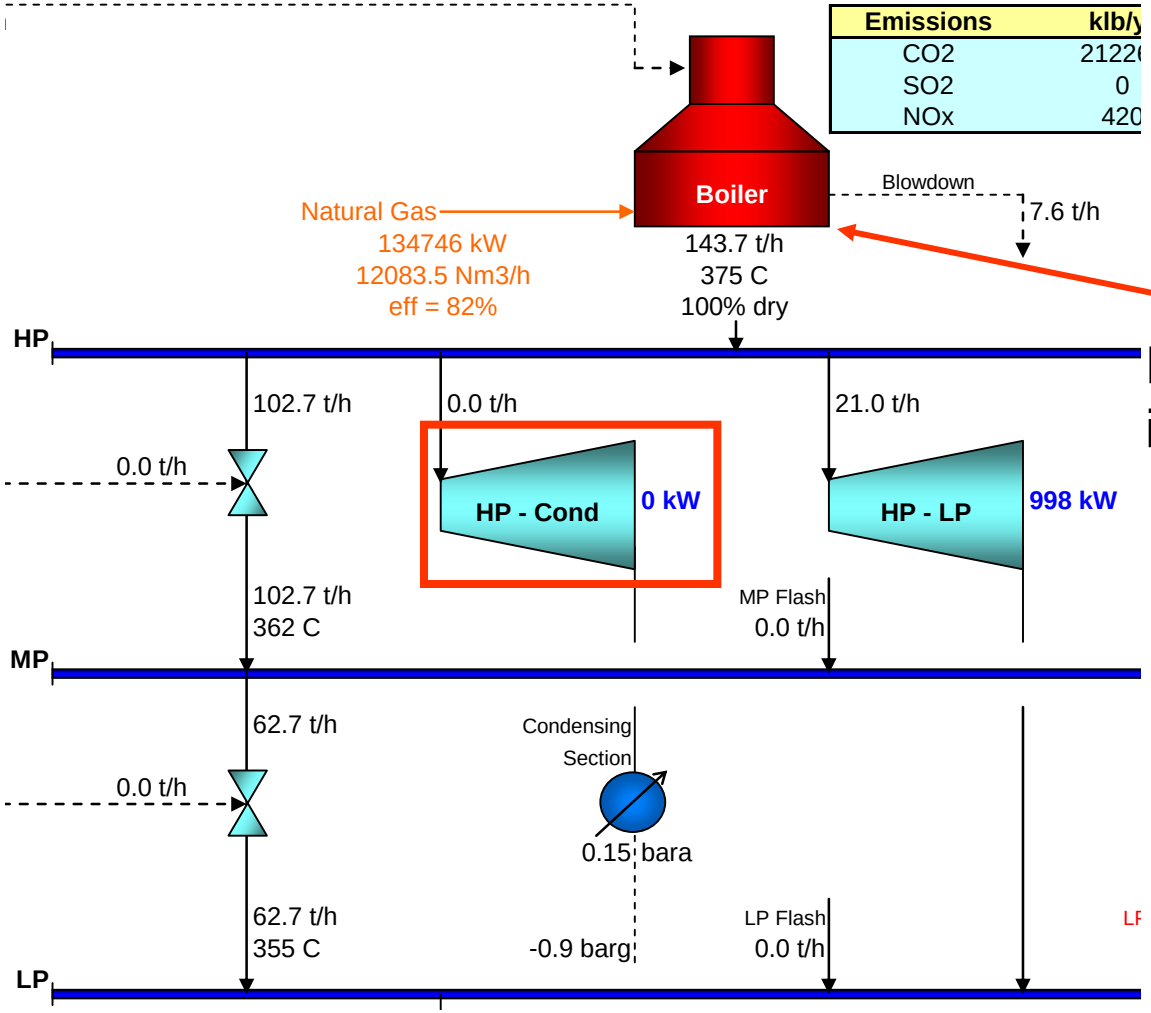

Large change in steam demand

UNIDO 2012, all rights reserved

SSAT Project 10 - Condensing Steam Turbines

Cost Summary ($ '000s/yr)	Current Operation	After Projects	Reduction	
Power Cost	4,380	5,256	-876	-20.0%
Fuel Cost	110,572	105,851	4,720	4.3%
Make-Up Water Cost	421	420	2	0.5%
Total Cost (in $ '000s/yr)	**115,373**	**111,527**	**3,846**	**3.3%**

On-Site Emissions	Current Operation	After Projects	Reduction	
CO2 Emissions	221726 t/yr	212260 t/yr	9465 t/yr	4.3%
SOx Emissions	0 t/yr	0 t/yr	0 t/yr	N/A
NOx Emissions	439 t/yr	420 t/yr	19 t/yr	4.3%

Power Station Emissions	Reduction After Projects	Total Reduction	
CO2 Emissions	-6238 t/yr	3227 t/yr	-
SOx Emissions	-19 t/yr	-19 t/yr	-
NOx Emissions	-14 t/yr	5 t/yr	-

Note - Calculates the impact of the change in site power import on emissions from an external power station. Total reduction values are for site + power station

Utility Balance	Current Operation	After Projects	Reduction	
Power Generation	1998 kW	998 kW	-	-
Power Import	5000 kW	6000 kW	-1000 kW	-20.0%
Total Site Electrical Demand	6998 kW	6998 kW	-	-
Boiler Duty	140754 kW	134746 kW	6009 kW	4.3%
Fuel Type	Natural Gas	Natural Gas	-	-
Fuel Consumption	12622.3 Nm3/h	12083.5 Nm3/h	538.8 Nm3/h	4.3%
Boiler Steam Flow	150.1 t/h	143.7 t/h	6.4 t/h	4.3%
Fuel Cost (in $/MWh)	89.68	89.68	-	-
Power Cost (as $/MWh)	100.00	100.00	-	-
Make-Up Water Flow	73 m3/h	73 m3/h	0 m3/h	0.5%

UNIDO 2012, all rights reserved

Condensing Turbine Performance

Condensing Turbine Impact Power Cost			
Fuel Cost [$/GJ]	**Impact Condensing Power Cost [$/MWh]**		
	Turbine Isentropic Efficiency [%]		
	40	**60**	**80**
2.0	56	39	30
4.0	111	78	60
6.0	167	116	89
8.0	223	155	119
10.0	278	194	149
12.0	334	233	179
Steam inlet	25	bars	
Steam inlet	375	°C	
Steam exit	0.1	bar(a)	

UNIDO 2012, all rights reserved

Condensing Turbine Pressure Effect

- It should be noted that a minimum pressure is generally attained where maximum energy utilization efficiency is achieved
  - In other words, there is generally a pressure threshold that further reductions in discharge pressure result in reducing overall cost effectiveness
  - Velocity losses begin to be excessive
    - This is very dependent on the turbine design
      - Larger annular steam flow area reduces the loss
  - Condensate is returned to the boiler at lower temperature
  - Common design is for 1.5 inches of mercury absolute (0.74 psia) condenser pressure

UNIDO 2012, all rights reserved

Condensing Turbine Pressure Effect

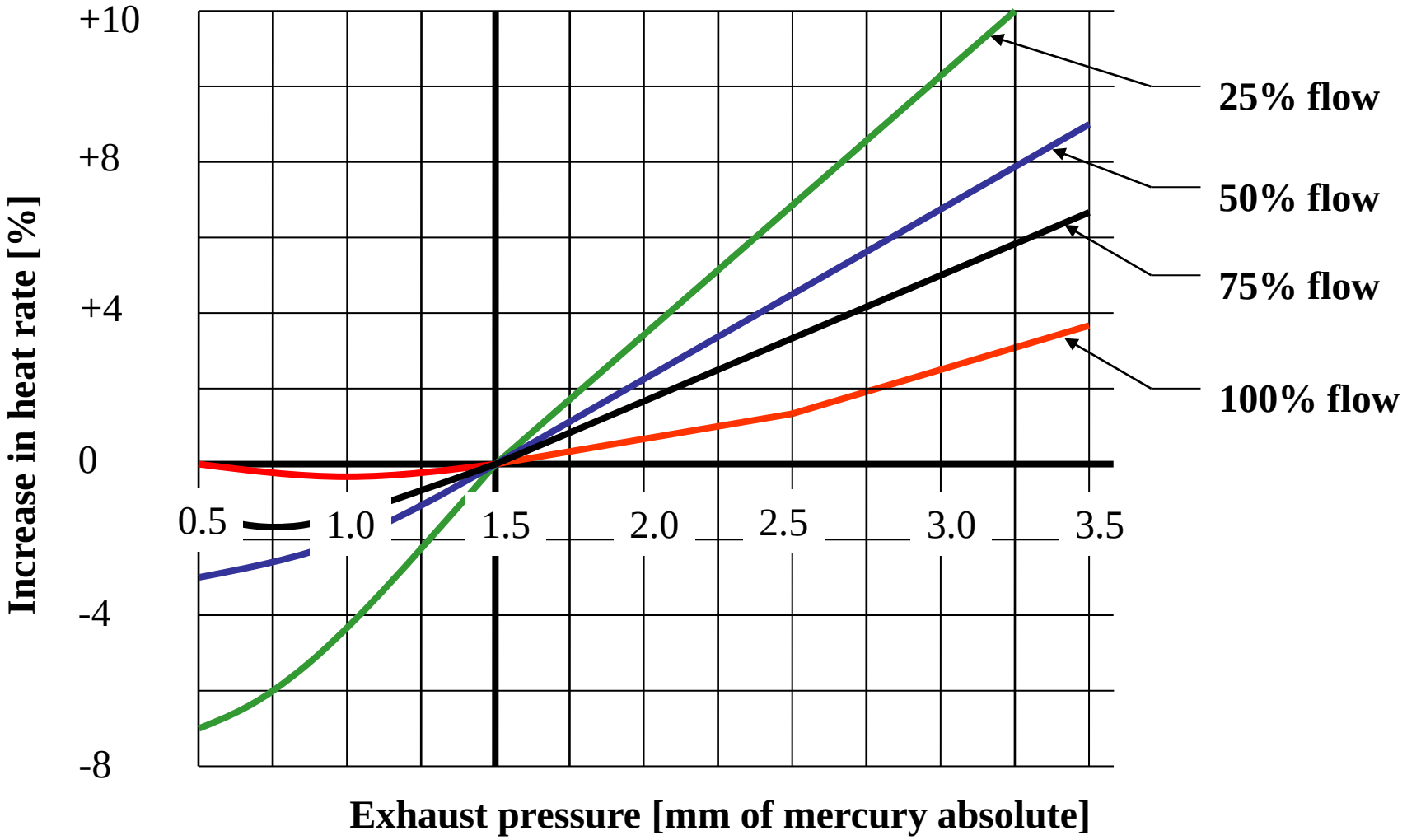

UNIDO 2012, all rights reserved

Key Points / Action Items

1. *Condensing turbines are used strictly for power generation or driving large mechanical equipment*
2. *They serve niche applications in the industry*
3. *Condensing turbines provide maximum shaft power per unit of steam flow*
4. *Each facility analysis is unique and will depend on several economic as well as operating factors*
5. *Turbine analysis will need a solid thermodynamic steam system model*

UNIDO 2012, all rights reserved

Common BestPractices –Turbines

- Process and utility integration leads to overall energy optimization of the plant
- Install backpressure turbines in parallel with pressure letdown stations and minimize flow through letdown stations
- Evaluate backpressure turbine applications for direct mechanical drives
- Evaluate condensing turbines and optimize their operations to maintain design conditions
- Condensing turbines can serve as a system balance mechanism especially, in industries which have significant waste heat steam generation

Source: US DOE BestPractices Steam System Sourcebook

UNIDO 2012, all rights reserved