# Section 5

# Combined Heat & Power (Cogeneration)

Fundamentals of Turbines
Backpressure Turbines
Modeling Backpressure Turbines in SSAT
Hands-On Student Exercise
Condensing Turbines
Modeling Condensing Turbines in SSAT

UNIDO 2012, all rights reserved

# Steam System

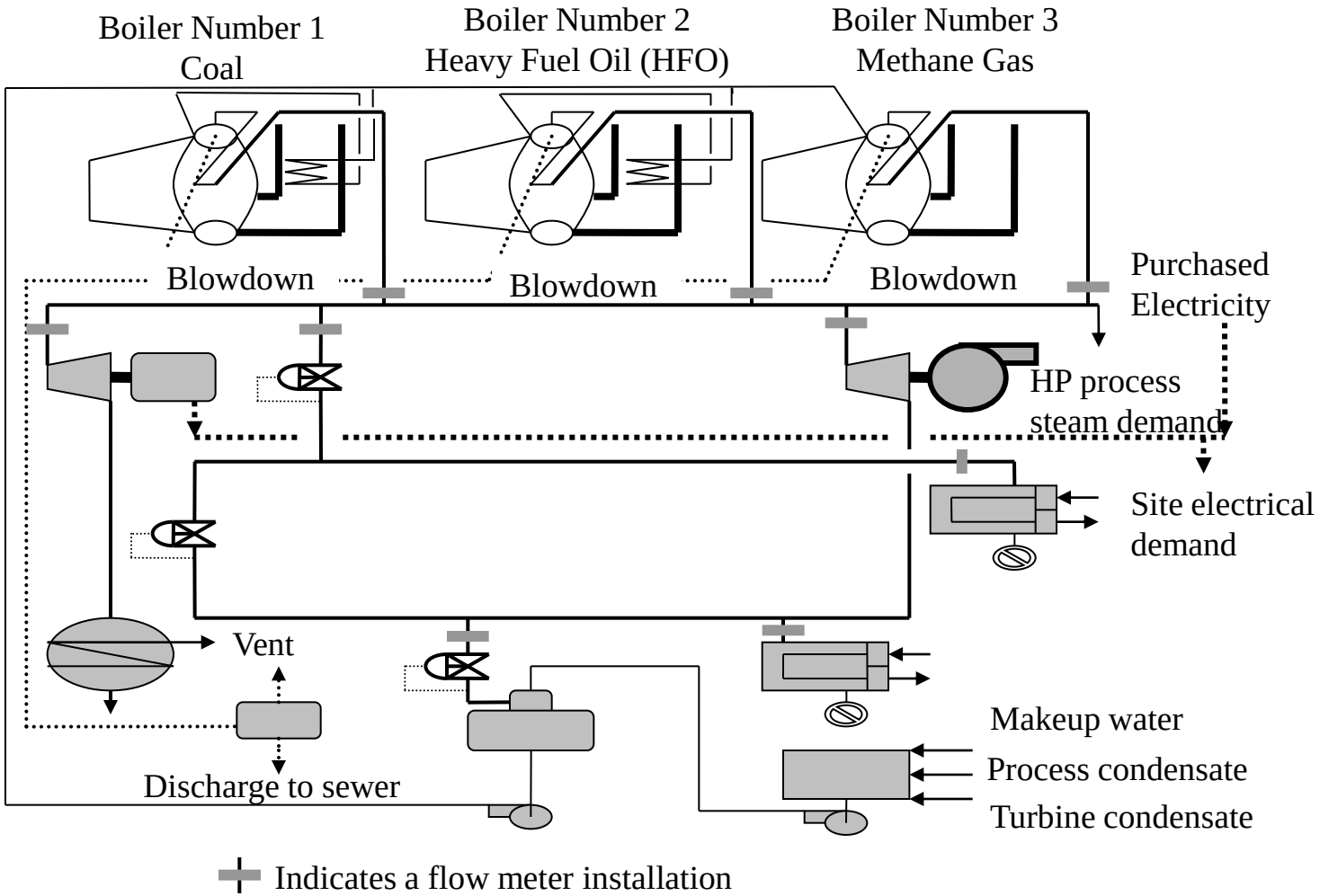


UNIDO 2012, all rights reserved

# Turbines 101

- What is a Turbine?
  - Energy Conversion Device

**Potential / Kinetic / Pressure / Thermal Energy**

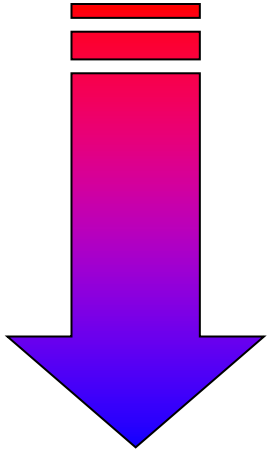

**Rotational Shaft Energy**

UNIDO 2012, all rights reserved

# Users of Steam Turbines in Industry

- Heavy Steam Turbine Users
  - Petrochemicals
  - Petroleum Refining
  - Forest Products (Pulp & Paper)
  - Rubber
  - Pharmaceuticals
  - Manufacturing Assembly
- Medium & Small Steam Turbine Users
  - Food & Beverage
  - Plastics
  - Electronics
  - Metal Fabrication

UNIDO 2012, all rights reserved

# Users of Steam Turbines in Industry

- Steam turbine drives commonly used in industry
  - Direct power generation
  - Boiler feed water pumps
  - Cooling tower water pumps
  - Chilled water pumps
  - Boiler forced draft fans
  - Exhaust fans
  - Air compressors
  - Refrigeration machines
  - Chiller systems
  - Other utility services

UNIDO 2012, all rights reserved

# Users of Steam Turbines in Industry

- Steam Turbines
  - Many different kinds
    - Backpressure
    - Condensing
    - Extraction
    - Combination
  - Different size and efficiency ranges
  - Backpressure turbines are used in lieu of letdown stations and in parallel with letdown stations
  - Condensing turbines provide maximum shaft power per unit of steam flow

UNIDO 2012, all rights reserved

# Backpressure Steam Turbines

- Backpressure steam turbines discharge steam at a pressure greater than (or equal to) atmospheric pressure

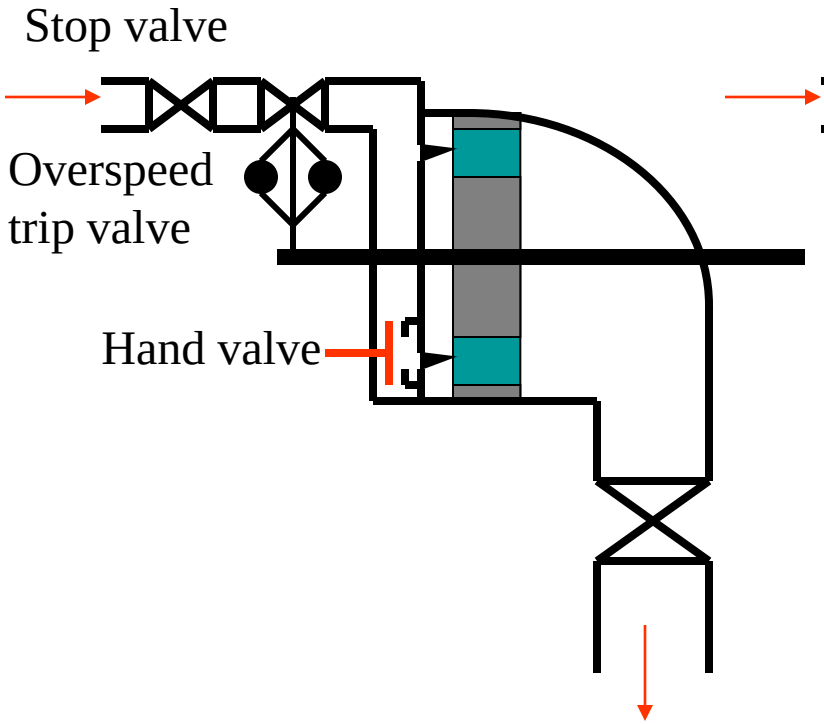


**Single Stage Backpressure Turbine**

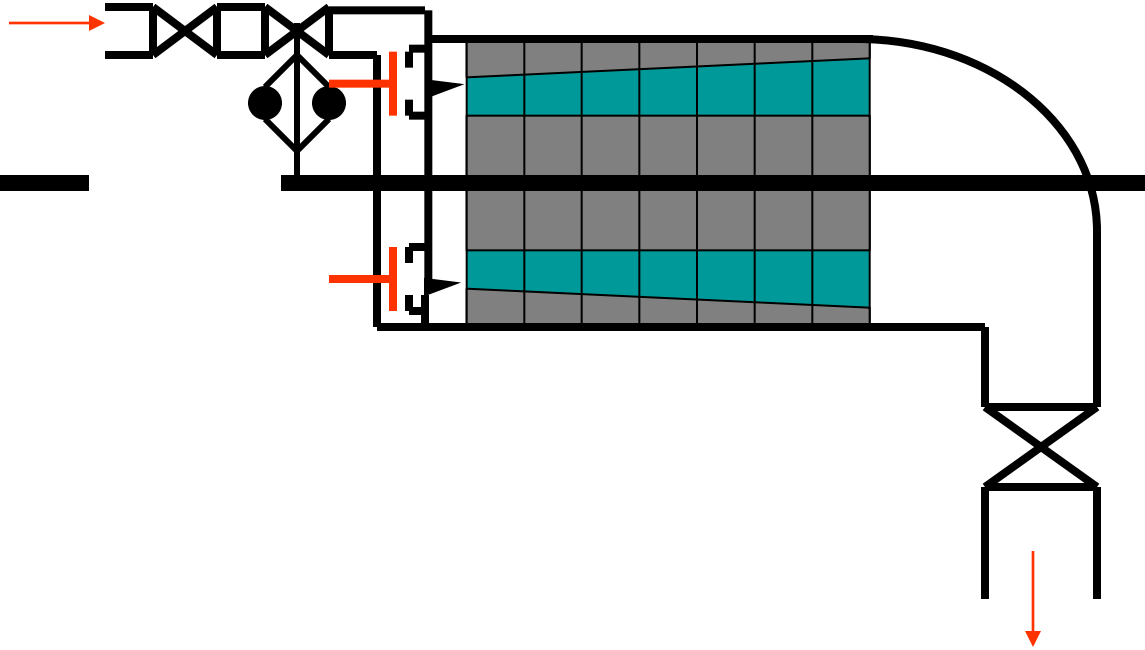

**Multistage Backpressure Turbine**

UNIDO 2012, all rights reserved

# Backpressure Steam Turbines

- Very common
- Simplest form
- Works against a backpressure
- Exhausts to a process load or steam header
- An excellent candidate for industrial applications

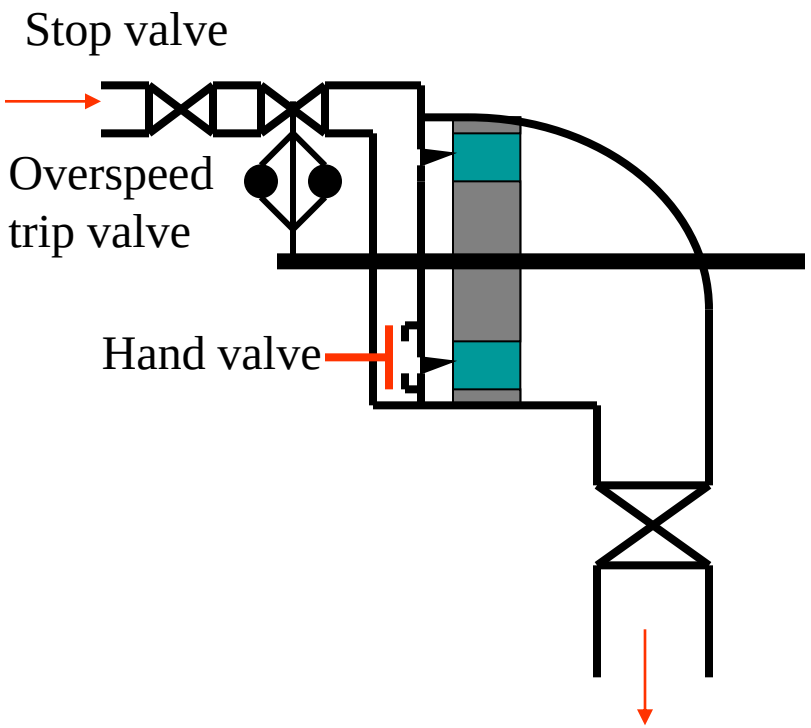


**Single Stage Backpressure Turbine**

UNIDO 2012, all rights reserved

# Extraction Steam Turbines

- Very common in plants that have multiple steam pressure headers
- Works against a backpressure
- Exhausts to a process load, steam header or a condenser
- An excellent candidate for balancing headers & eliminating steam venting

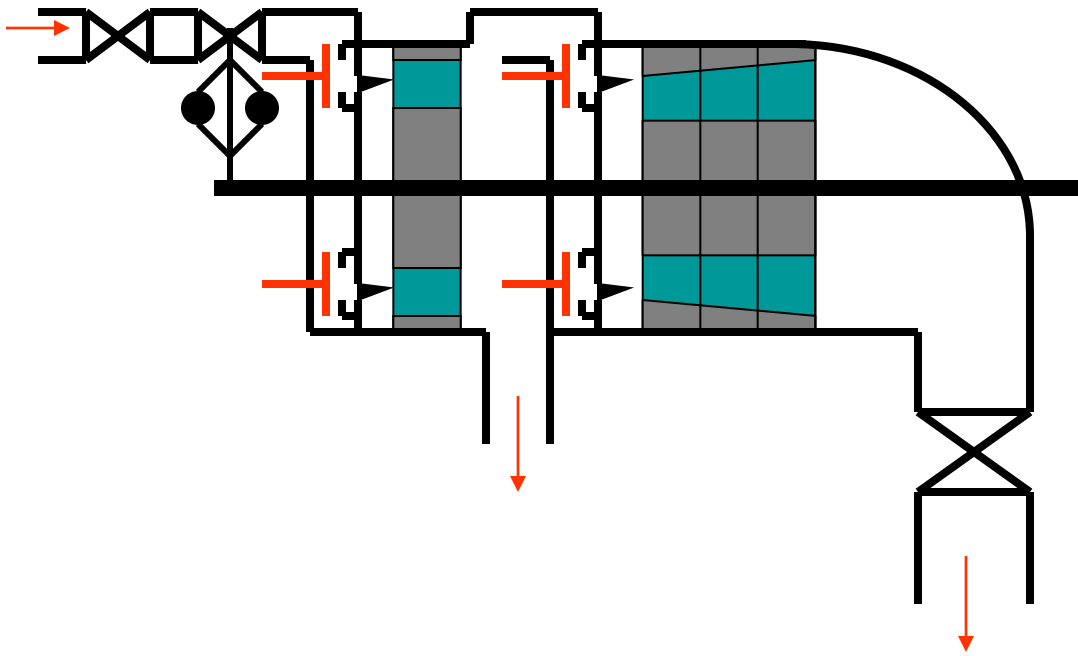

**Extraction Turbine**

UNIDO 2012, all rights reserved

# Condensing Steam Turbines

- The industry workhorse for power generation
- Will always have an associated steam condenser
- Exhausts to vacuum
- Highest operating pressure ratios
- Multistage and may even have two or three sections
- Very large sizes
- Lowest steam rates

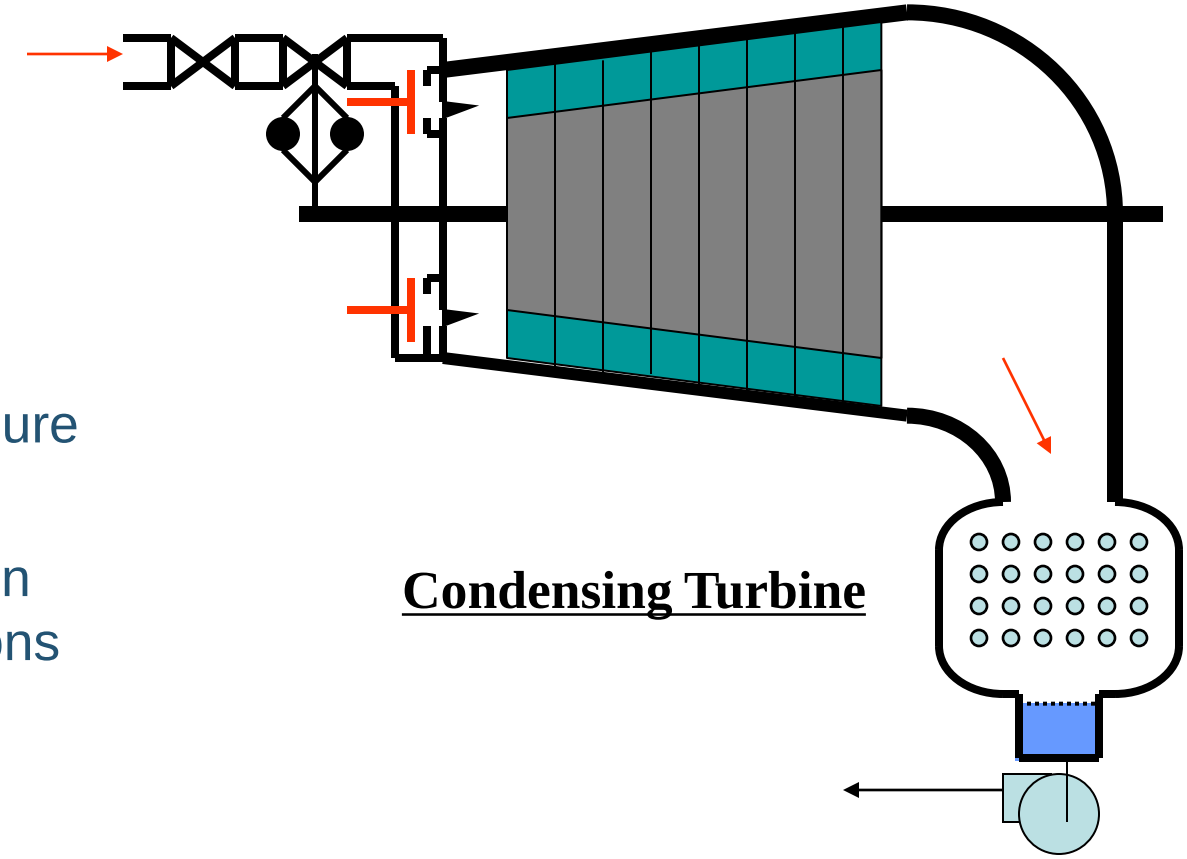


UNIDO 2012, all rights reserved

# Typical Industrial Steam Turbines Operations

- Operating pressures
  - Minimum – 10 bars (for backpressure)
  - Maximum – 100 bars
  - Vacuum conditions can exist at the exhaust!
- Operating steam temperatures
  - Saturated or a few degrees of superheat
  - Maximum – 200°C superheat
- Summary – Steam turbine technology is very diverse and operates over a broad range of pressures and temperatures

UNIDO 2012, all rights reserved

# Turbine First Law Efficiency

- An energy balance conducted on a steam turbine will reveal an exceptionally high efficiency
  - Essentially all of the energy taken out of the steam is converted into shaft energy

$$\eta_{first\,law} = \frac{\dot{W}_{shaft}}{\dot{m}_{steam}\left(h_i - h_e\right)} \approx 100\%$$

- Steam turbines operate with only minor “losses”
  - Bearing friction
  - Heat transfer
  - Gland losses

UNIDO 2012, all rights reserved

# The Perfect Turbine

- Steam turbines are evaluated using the *Second Law of Thermodynamics*
  - The Second Law of Thermodynamics identifies that *thermal energy* cannot be converted completely into *power*
    - *Power* can be converted completely into *thermal energy*
  - This defines the maximum amount of shaft power that could possibly be produced (based on the laws of physics)
    - This defines a *perfect turbine*, which would operate *isentropically*
      - *Isentropic* is *constant entropy (no losses)*
        - » No entropy generation

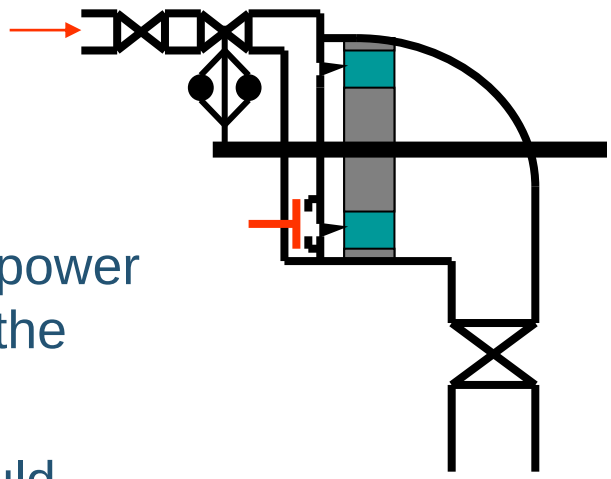

UNIDO 2012, all rights reserved

# Isentropic Efficiency

- Steam turbine efficiency is described as *isentropic efficiency*
  - A comparison of the actual work produced compared to a perfect (isentropic) turbine

$$\eta_{isentropic} = \frac{Actual\ Work}{Isentropic\ Work} = \frac{\dot{W}_{actual}}{\dot{W}_{isentropic}}$$

$$\eta_{isentropic} = \frac{\dot{m}_{steam}\left(h_{inlet} - h_{exit}\right)_{actual}}{\dot{m}_{steam}\left(h_{inlet} - h_{exit}\right)_{isentropic}} = \frac{\left(h_i - h_e\right)_{actual}}{\left(h_i - h_e\right)_{isentropic}}$$

UNIDO 2012, all rights reserved

# Isentropic Efficiency

- Steam turbine efficiency is not “like” boiler efficiency
  - Turbine isentropic efficiency is a comparison of the actual turbine operation to that of a perfect turbine operating with the same inlet conditions and outlet pressure
  - Isentropic efficiency is a description of how much mechanical energy is developed from thermal energy

- The steam exiting the turbine contains a significant amount of useful thermal energy

UNIDO 2012, all rights reserved

# Mollier Diagram

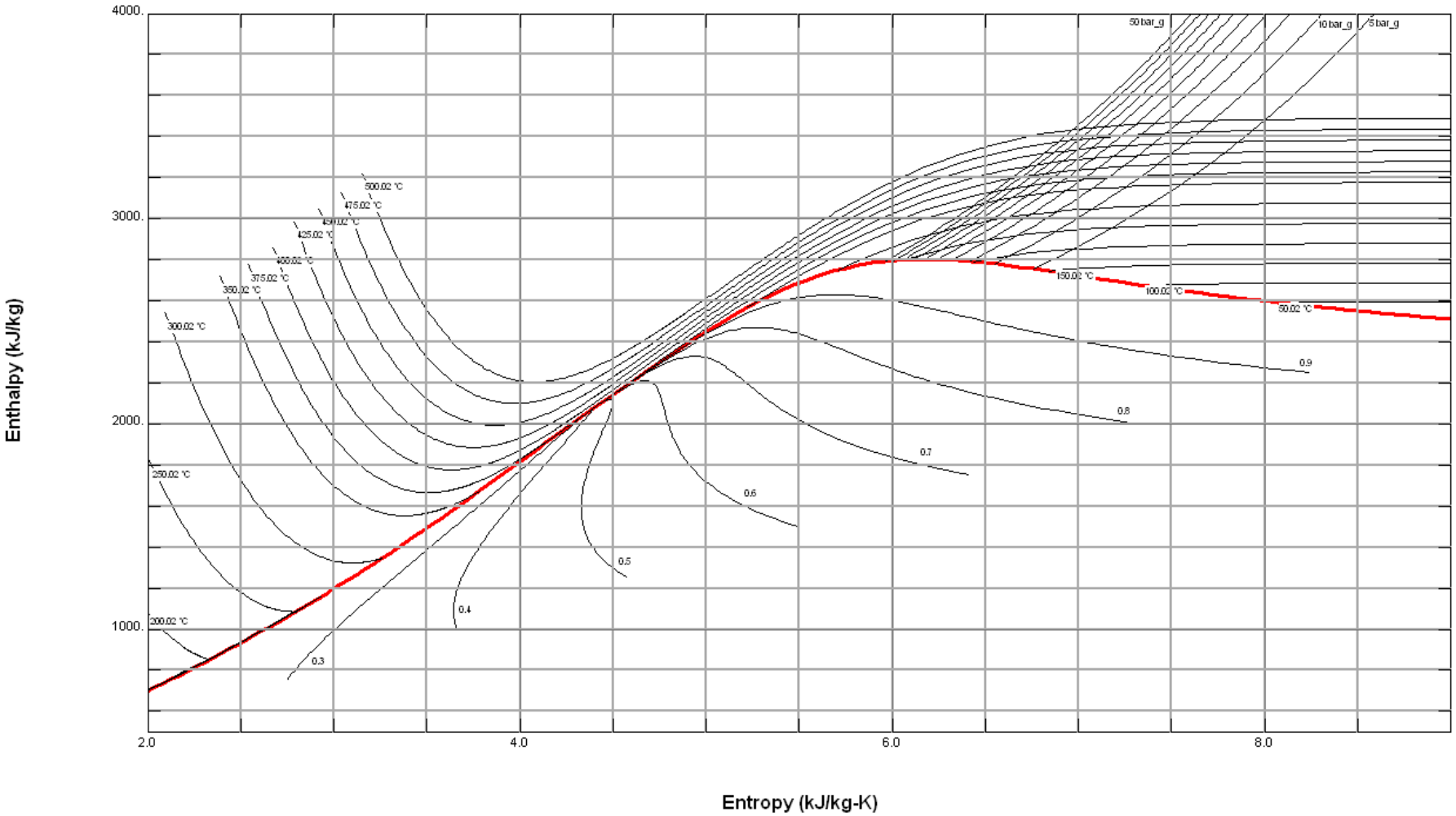


UNIDO 2012, all rights reserved

# Mollier Diagram

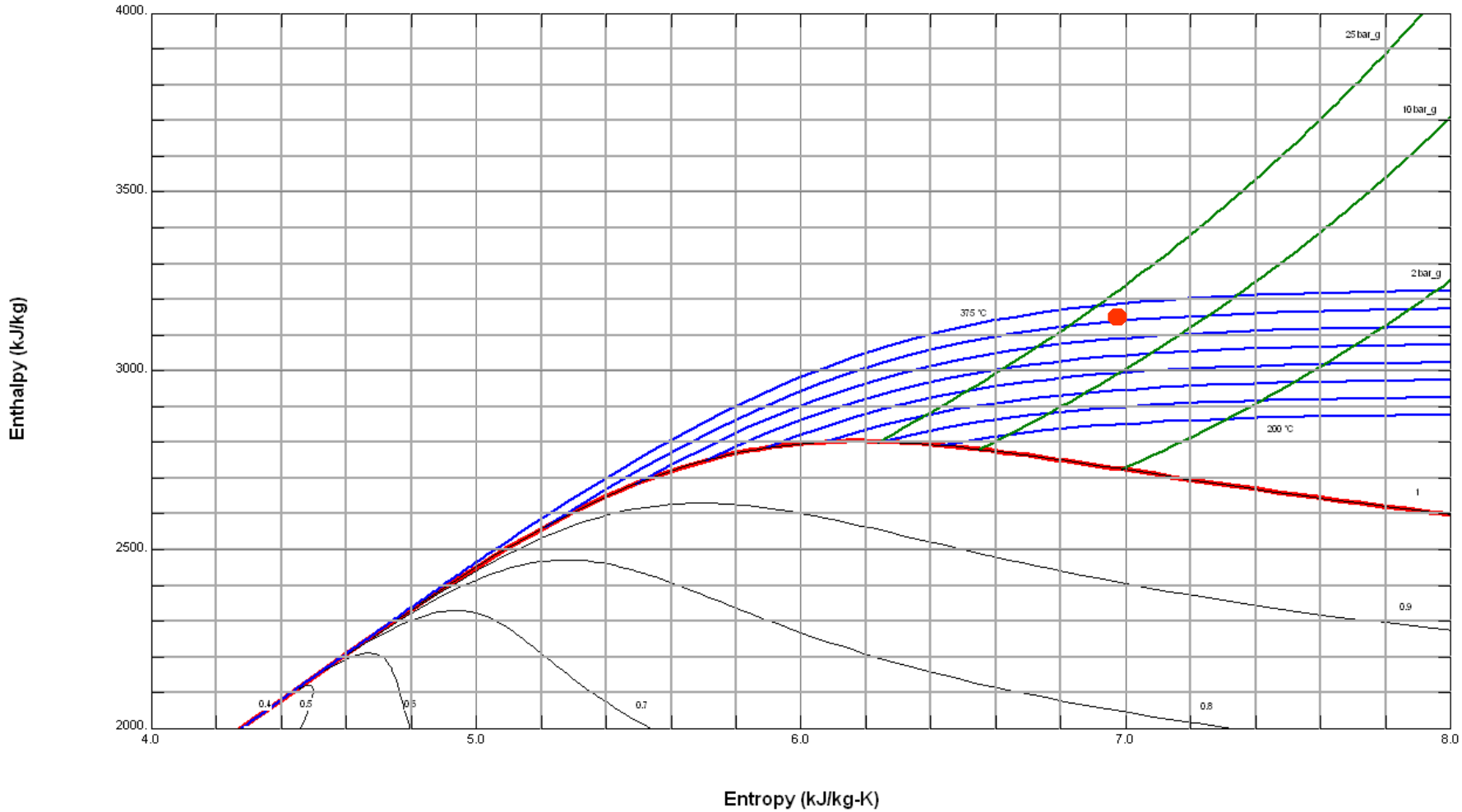


UNIDO 2012, all rights reserved

# Mollier Diagram – Isentropic Turbine Efficiency

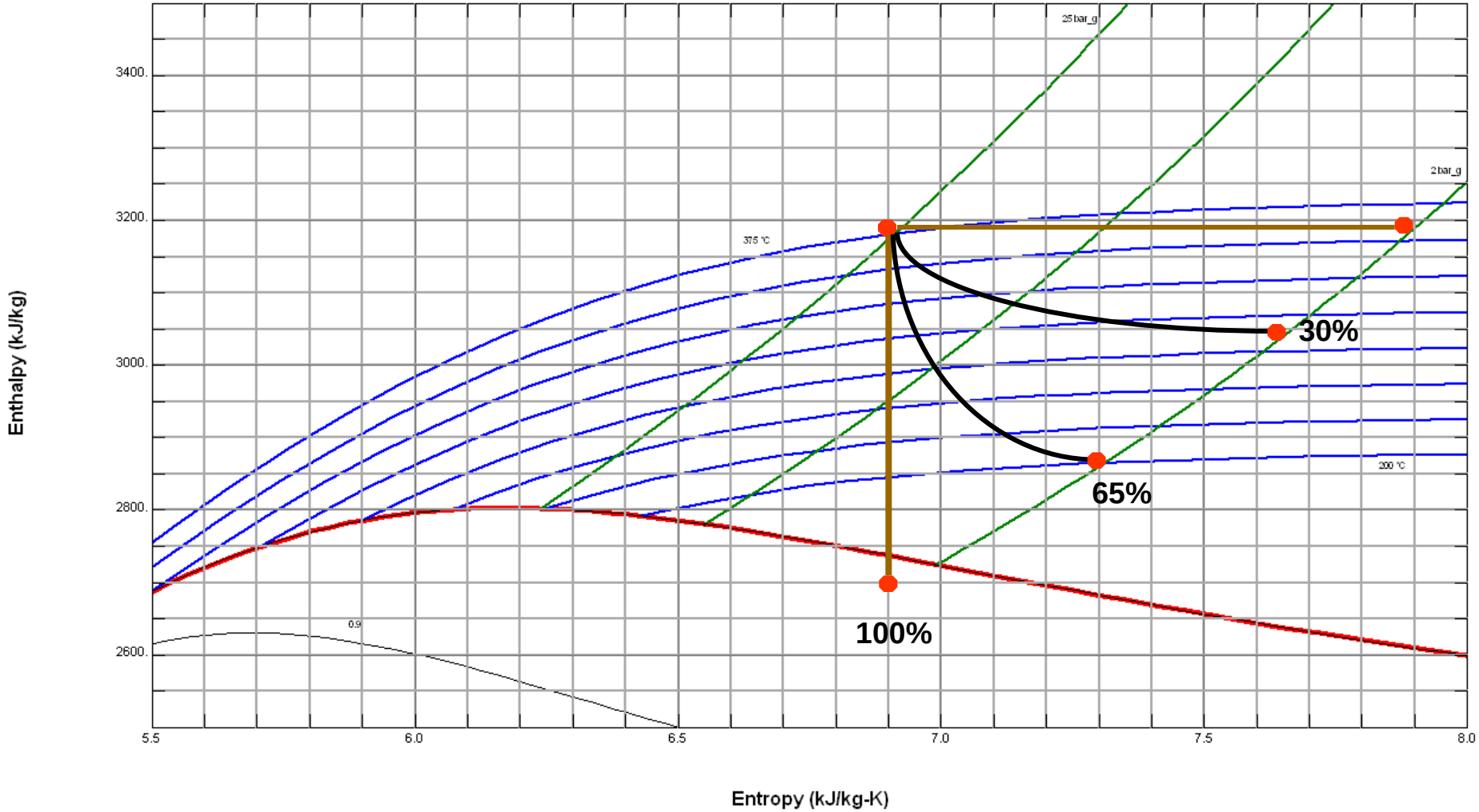


UNIDO 2012, all rights reserved

# Typical Steam Turbine Efficiency

$$\eta_{isentropic} = \frac{(h_{in} - h_{out})_{actual}}{(h_{in} - h_{out})_{isentropic}} = 20\% \; to \; 80\%$$

- Major contributors to isentropic efficiency
  - Turbine design
  - Control valve type
    - Single valve – throttle
    - Multi-valve – flow nozzles
- Will need this information for ANY turbine analysis

UNIDO 2012, all rights reserved

# Steam Turbine Efficiency

- Generally, single stage turbines operate with lower isentropic efficiency than multistage turbines
  - Increasing steam path area (diameter) decreases losses
    - Steam exhaust velocity and wall friction decrease
  - Single stage turbines are typically more efficient than multistage turbines for small capacity machines

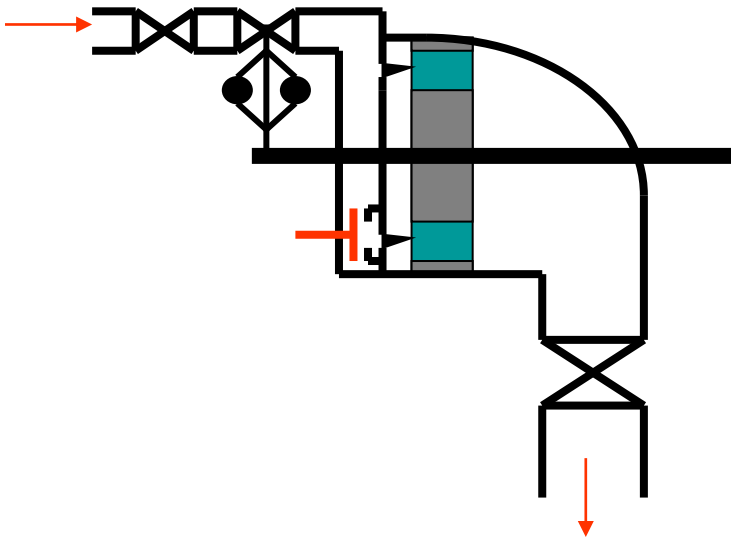

**Single Stage Backpressure Turbine**

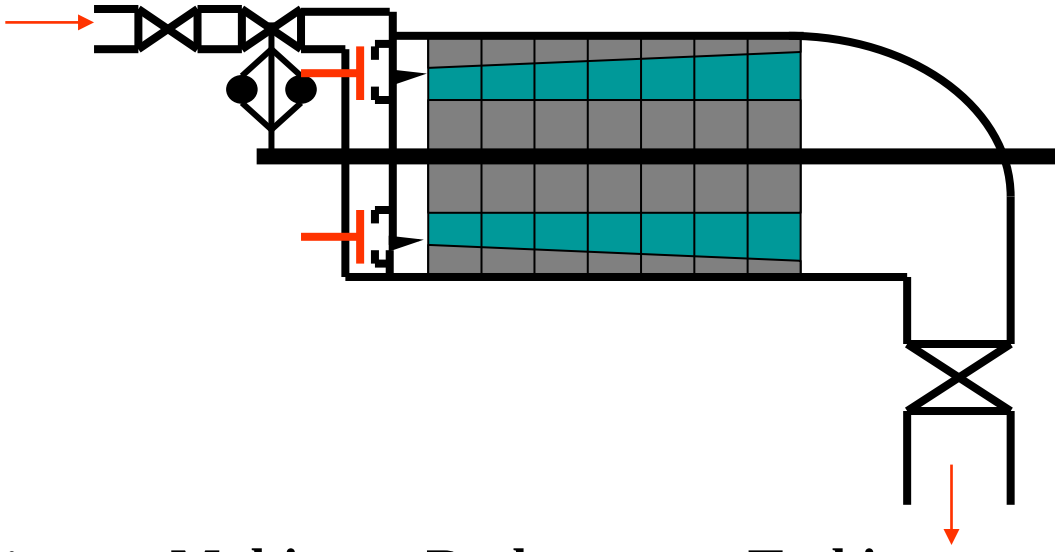

**Multistage Backpressure Turbine**

UNIDO 2012, all rights reserved

# Steam Turbine Efficiency

- Three methods of obtaining isentropic turbine efficiency:
  - Manufacturer specifications
    - Turbine maps / performance curves
    - Excellent starting point – for new designs also
  - Steam inlet and outlet conditions known
    - Superheated inlet along with superheated outlet is the most common and easiest to utilize
    - Will NOT work with saturated outlets (quality < 1)
  - Steam inlet conditions and power generation known
    - Typically used for electrical power generation units
    - Mass flow rate of steam will be required
    - Alternate option may exist for direct mechanical driven equipment but with higher uncertainty

UNIDO 2012, all rights reserved

# Turbine Efficiency from Inlet and Outlet Steam Conditions

- Method 2
- Turbine performance can be determined from inlet and outlet steam conditions and steam properties associated at those conditions

UNIDO 2012, all rights reserved

# Steam Turbine Efficiency

- For **superheated steam** conditions at the turbine inlet and outlet
  - Pressure and temperature measurements of superheated steam allow all of the thermodynamic properties to be known

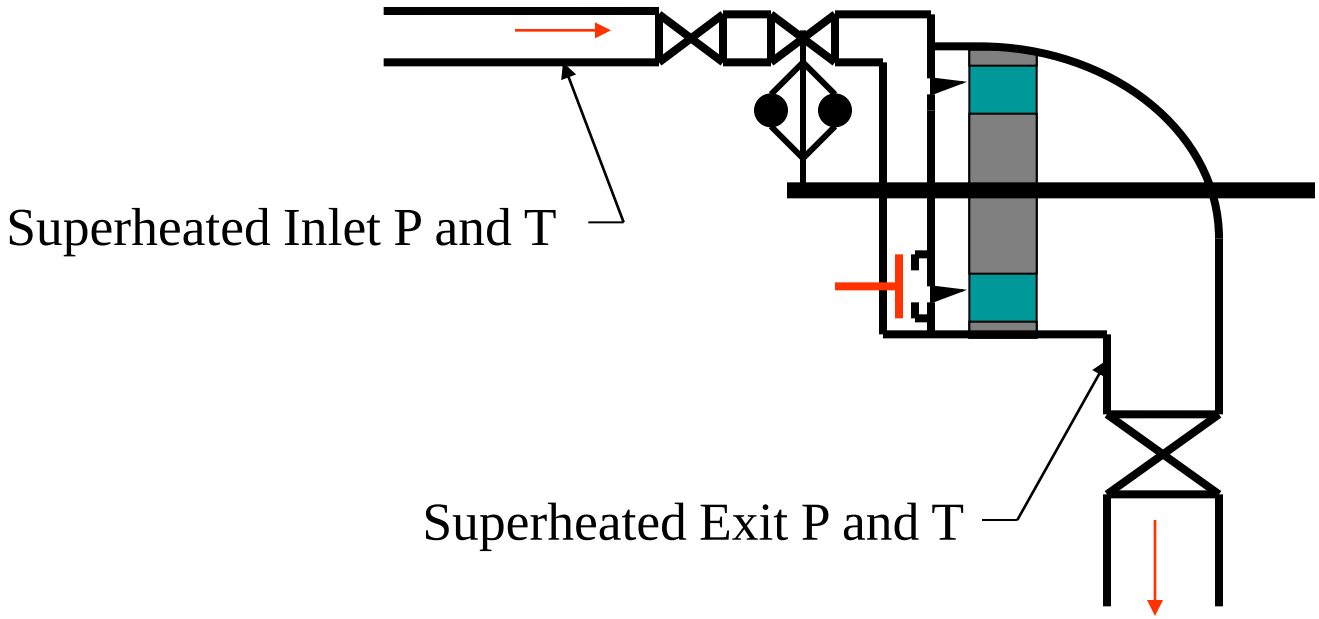


UNIDO 2012, all rights reserved

# Actual Operating Conditions

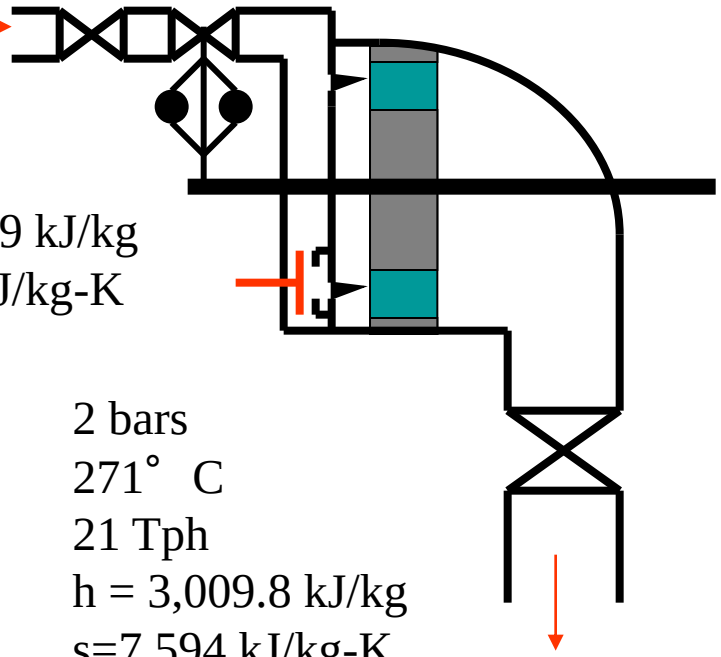


$$\dot{W}_{shaft} = \dot{m}_{steam}\left(h_i - h_e\right)_{steam} = \frac{21{,}000}{3{,}600}\left(3{,}180.9 - 3{,}009.8\right)$$

$$\dot{W}_{shaft} = 1{,}000\ kW = 1{,}000\ kW\left(\frac{1\ hp}{0.746\ kW}\right) = 1{,}340\ hp$$

UNIDO 2012, all rights reserved

# Isentropic Conditions

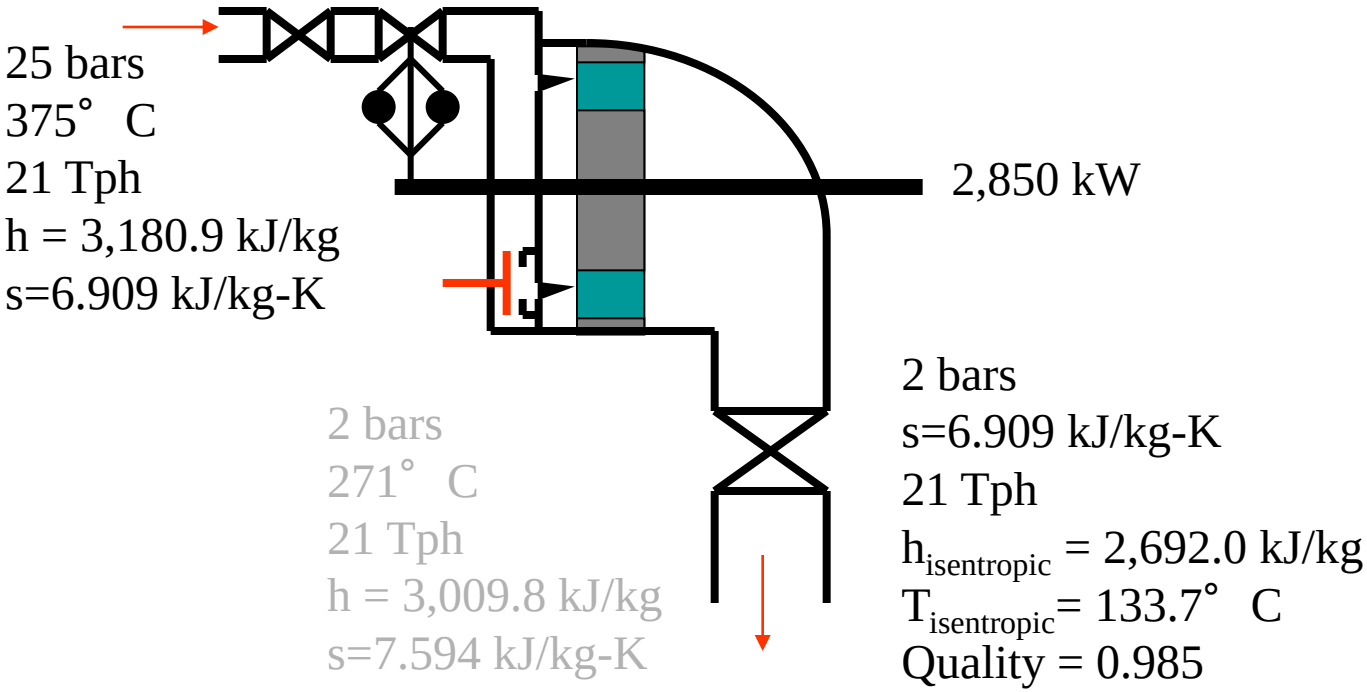


$$\dot{W}_{shaft} = \dot{m}_{steam}\left(h_i - h_e\right)_{steam} = \frac{21{,}000}{3{,}600}\left(3{,}180.9 - 2{,}692.0\right)$$

$$\dot{W}_{shaft} = 2{,}850\ kW = 2{,}850\ kW\left(\frac{1\ hp}{0.746\ kW}\right) = 3{,}825\ hp$$

UNIDO 2012, all rights reserved

# Isentropic Conditions

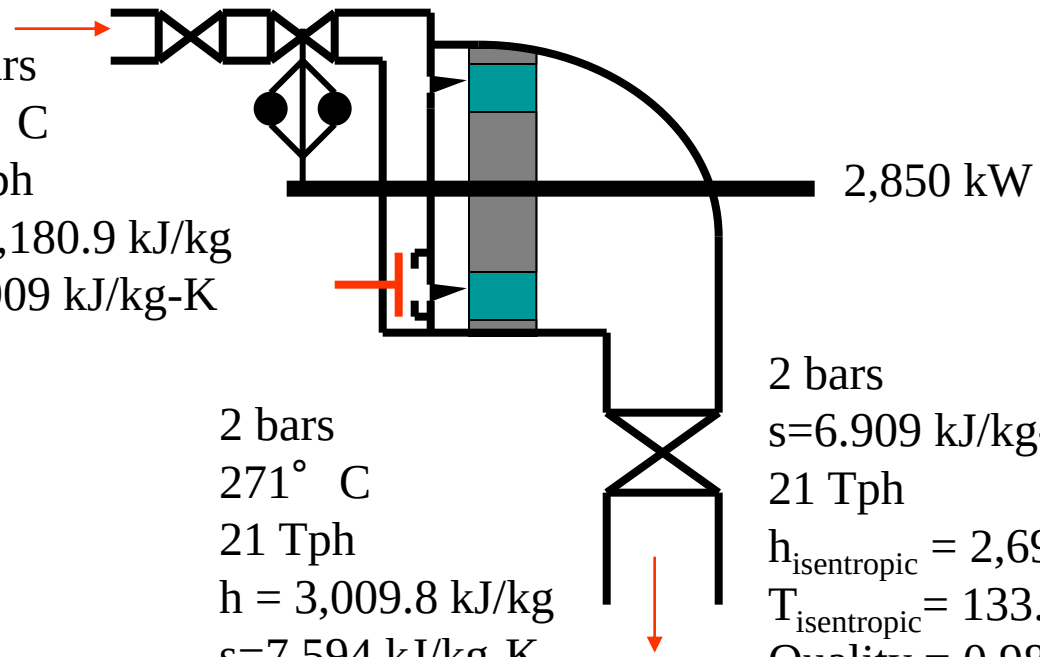


$$\eta_{isentropic} = \frac{(h_{inlet} - h_{exit})_{actual}}{(h_{inlet} - h_{exit})_{isentropic}} = \frac{(3{,}180.9 - 3{,}009.8)}{(3{,}180.9 - 2{,}692.0)} = \frac{171.1}{488.9} = 0.35$$

UNIDO 2012, all rights reserved

# Turbine Efficiency from Steam Conditions and Power Production

- Method 3
- Turbine performance can be determined from inlet steam properties and power production

UNIDO 2012, all rights reserved

# Steam Turbine Generator Efficiency

- Steam turbines coupled with electric generators provide an additional mechanism for calculating turbine isentropic efficiency
  - Additional measurements are required to allow the efficiency determination
  - This is typically the only practical method to evaluate condensing turbine efficiency

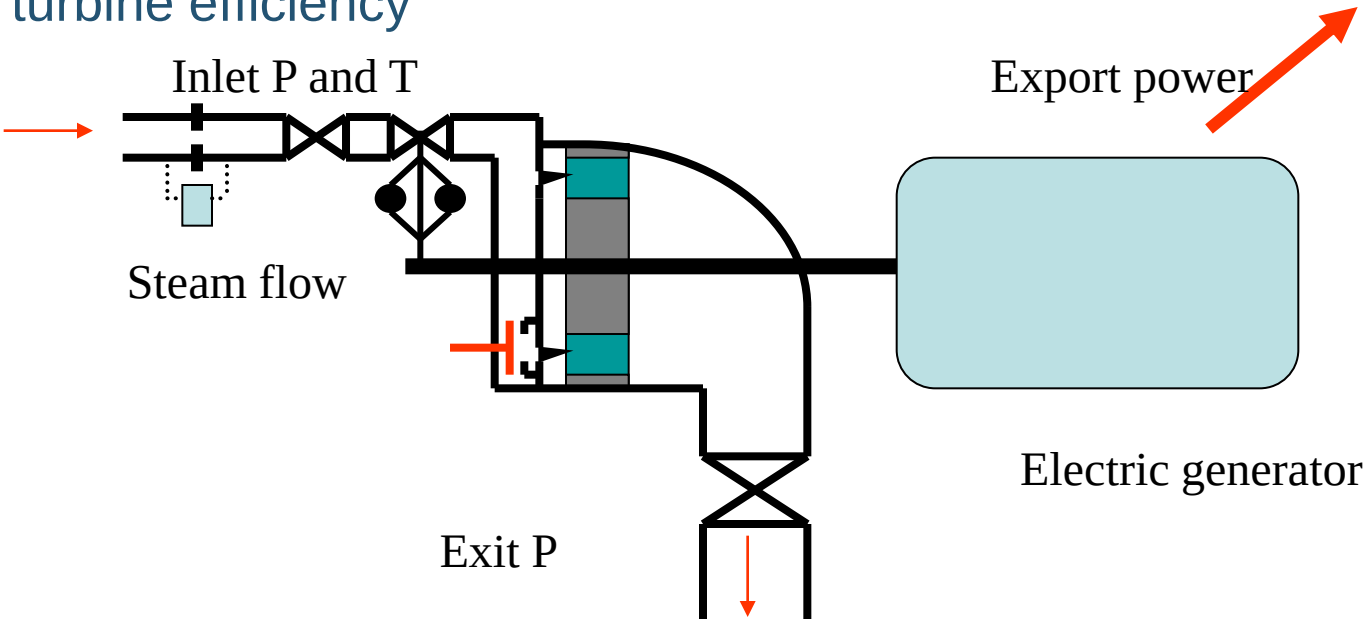


UNIDO 2012, all rights reserved

# Steam Turbine Efficiency

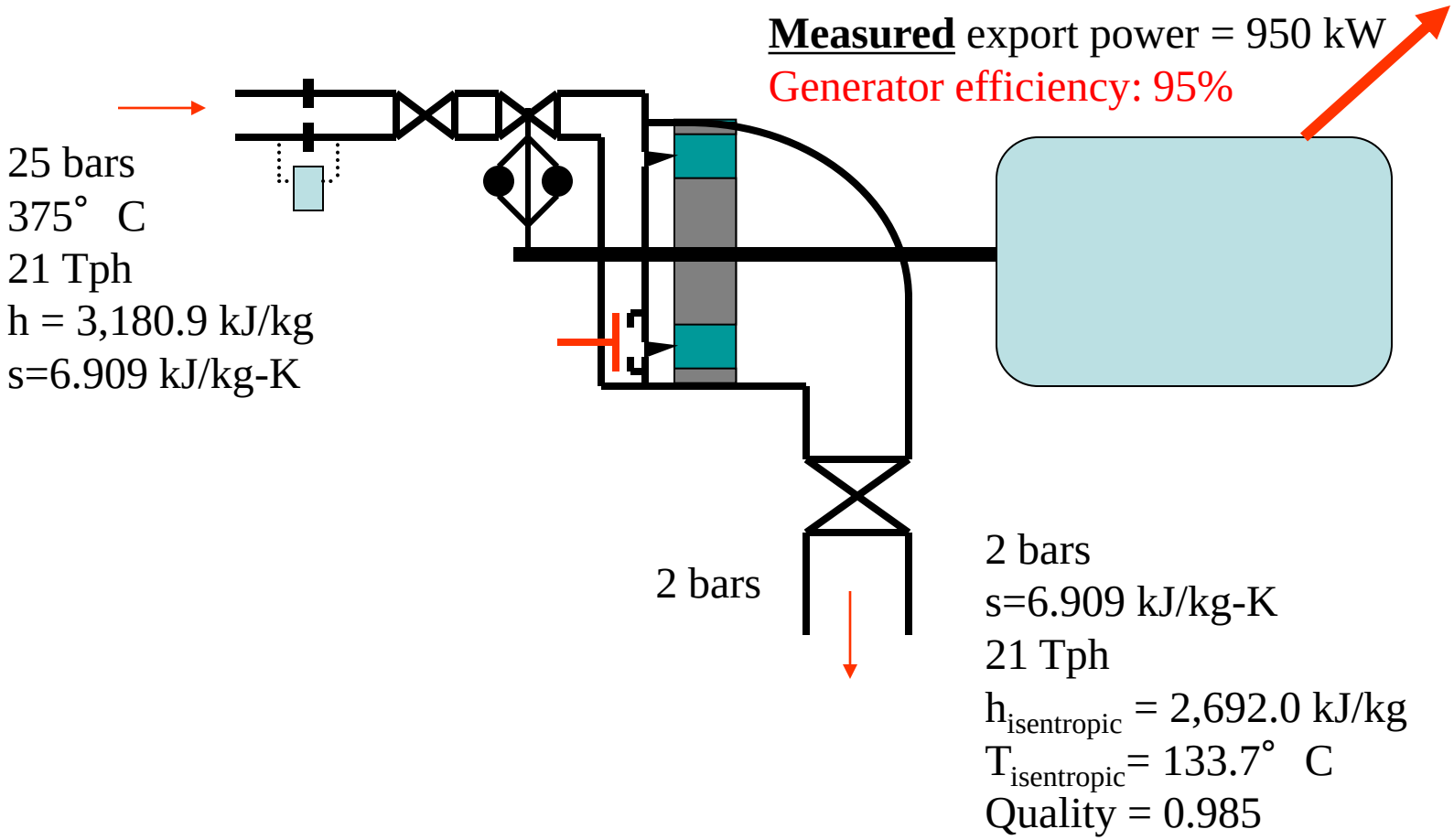


UNIDO 2012, all rights reserved

# Steam Turbine Efficiency

$$\dot{W}_{generator} = 950\ kW$$

$$\eta_{generator} = \frac{Generator\ Work}{Turbine\ Shaft\ Work} = \frac{\dot{W}_{generator}}{\dot{W}_{turbine}} = \frac{950\ kW}{\dot{W}_{turbine}} = 0.95$$

$$\dot{W}_{turbine} = 1{,}000\ kW$$

$$\eta_{isentropic} = \frac{Actual\ Turbine\ Work}{Isentropic\ Work} = \frac{\dot{W}_{generator}}{\eta_{generator}\dot{W}_{isen}} = \frac{\dot{W}_{gen}}{\eta_{gen}\dot{m}_{st}\left(h_i - h_e\right)_{isen}}$$

UNIDO 2012, all rights reserved

# Steam Turbine Efficiency

**Measured** export power = 950 kW
Generator efficiency: 95%

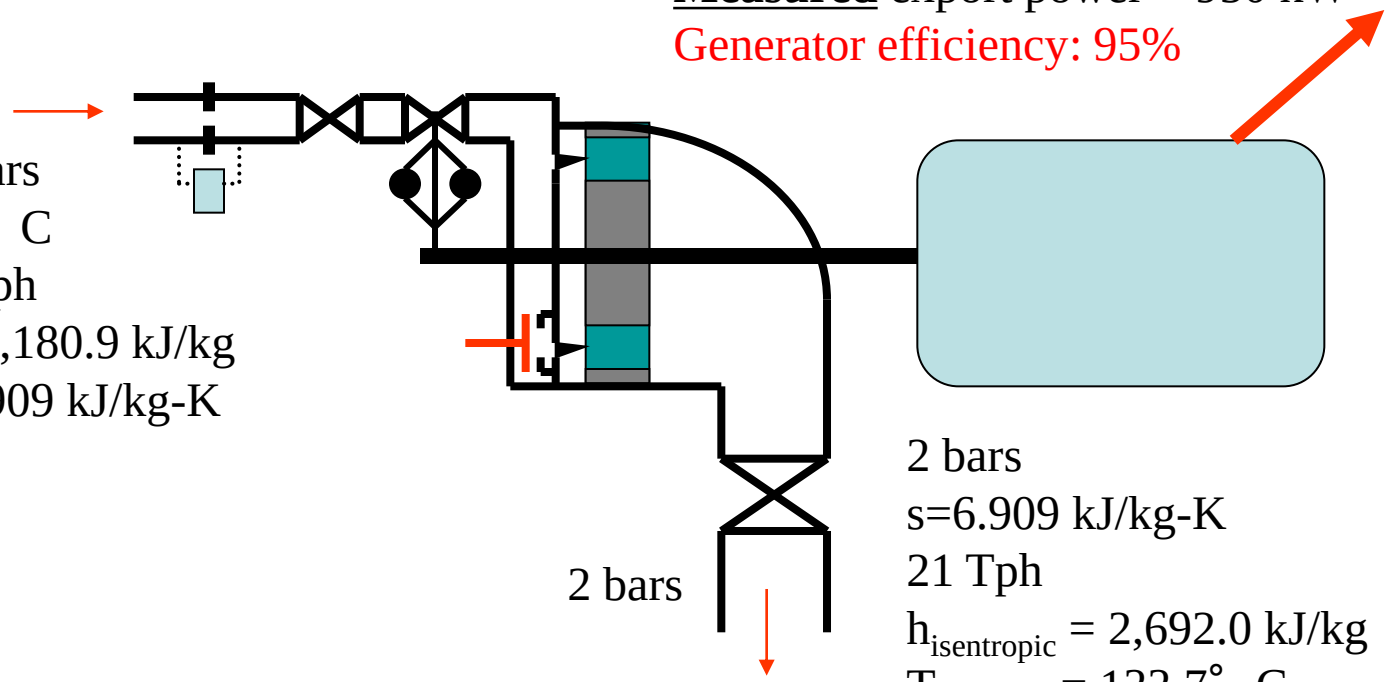

25 bars
375° C
21 Tph
h = 3,180.9 kJ/kg
s=6.909 kJ/kg-K

2 bars

2 bars
s=6.909 kJ/kg-K
21 Tph
$h_{isentropic}$ = 2,692.0 kJ/kg
$T_{isentropic}$= 133.7° C
Quality = 0.985

$$\eta_{isentropic} = \frac{950\,kW}{0.95}\,\frac{3{,}600\,\frac{s}{hr}}{21{,}000\,\frac{kg}{hr}}\,\frac{1}{\left(3{,}180.9\,\frac{kJ}{kg} - 2{,}692.0\,\frac{kJ}{kg}\right)} = 0.35$$

UNIDO 2012, all rights reserved

# Steam Rate

- *Steam rate* is an expression used to describe the amount of steam required to produce a specific amount of power
  - *Theoretical steam rate* is the ideal steam rate
  - *Actual steam rate* is the real world steam rate

$$Theoretical\ Steam\ Rate = TSR = \frac{\dot{m}_{steam}}{\dot{W}_{isentropic}} = \frac{1}{(h_1 - h_{2\,isen})}$$

$$Actual\ Steam\ Rate = ASR = \frac{\dot{m}_{steam}}{\dot{W}_{actual}} = \frac{1}{(h_1 - h_2)}$$

$$\eta_{isen} = \frac{TSR}{ASR}$$

UNIDO 2012, all rights reserved

# Steam Rate Factors

- Changing turbine inlet or outlet conditions will not impact isentropic efficiency significantly
  - Steam rate will change dramatically if conditions are changed
- Throttling the inlet of a steam turbine will impact the overall isentropic efficiency (valve inlet to turbine outlet)
  - The isentropic efficiency of the turbine will not change significantly (turbine inlet to outlet)
  - Steam rate will change dramatically

UNIDO 2012, all rights reserved

# Steam Rate & Efficiency

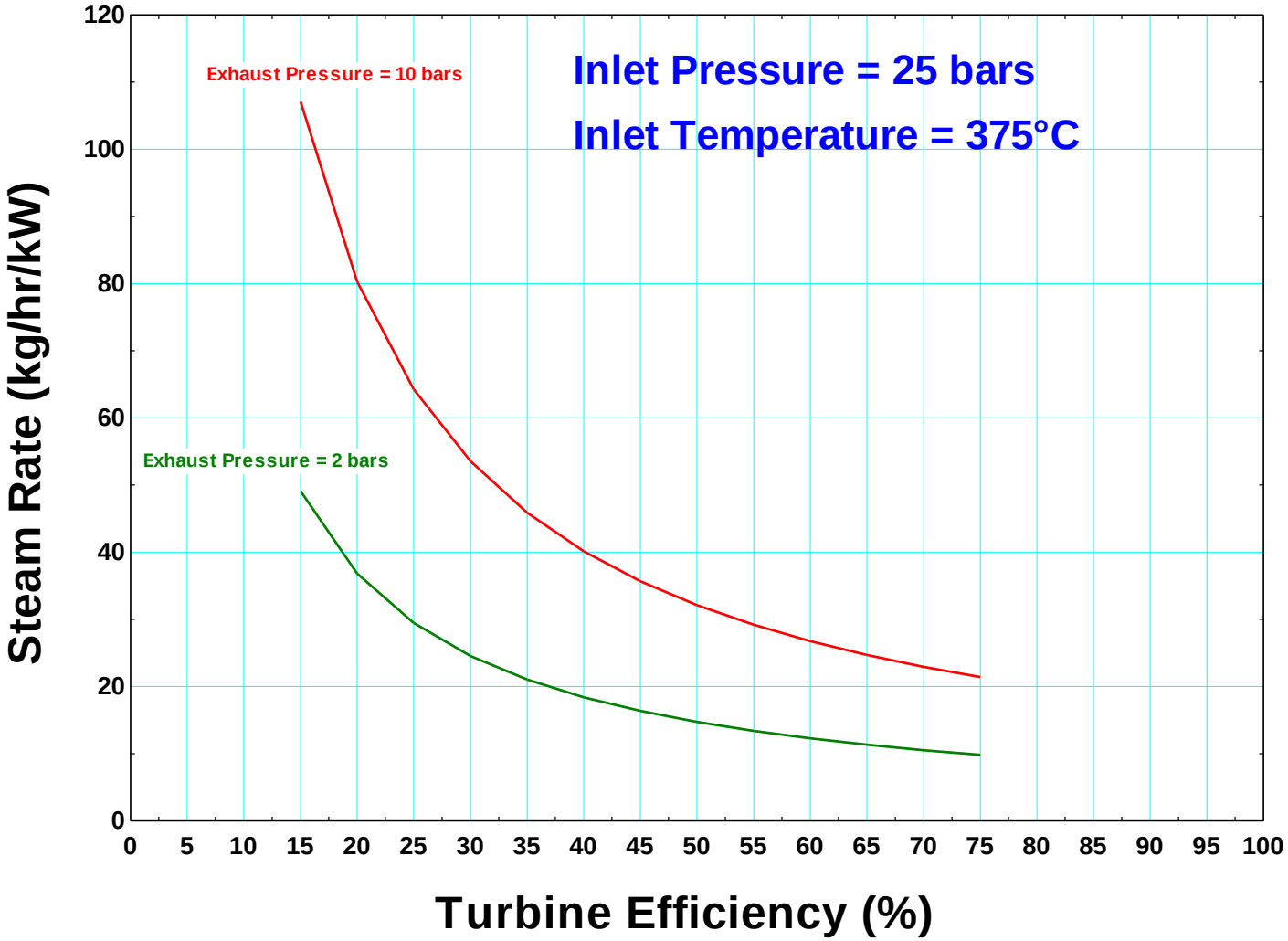


UNIDO 2012, all rights reserved

# Steam Turbine Speed

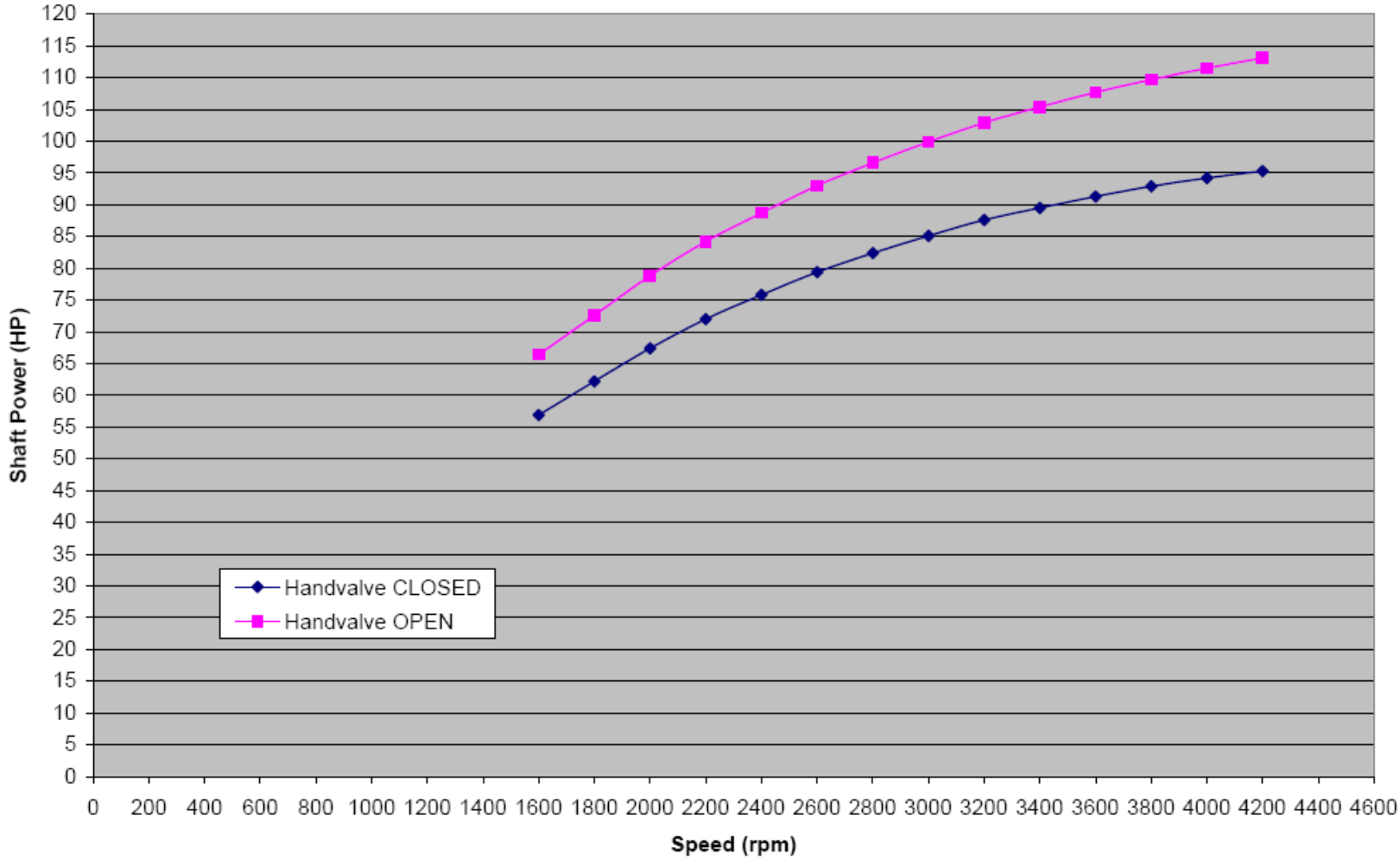


UNIDO 2012, all rights reserved

# SSAT Steam Turbine Applications

- **Total Site Electrical Demand** is held constant in SSAT project evaluations
- Power produced by the turbines reduces the **Power Import**
- SSAT incorporates a maximum of only four turbines
  - HP – LP
  - HP – MP
  - MP – LP
  - HP – Condensing
  - The *Impact Turbine* must be modeled
- *Site Detail* section allows actual performance to be incorporated into the analysis
  - Turbine efficiency
  - Pressure reducing valve interaction
    - Turbine capacity and control

UNIDO 2012, all rights reserved

# Steam Turbines Schematically in SSAT

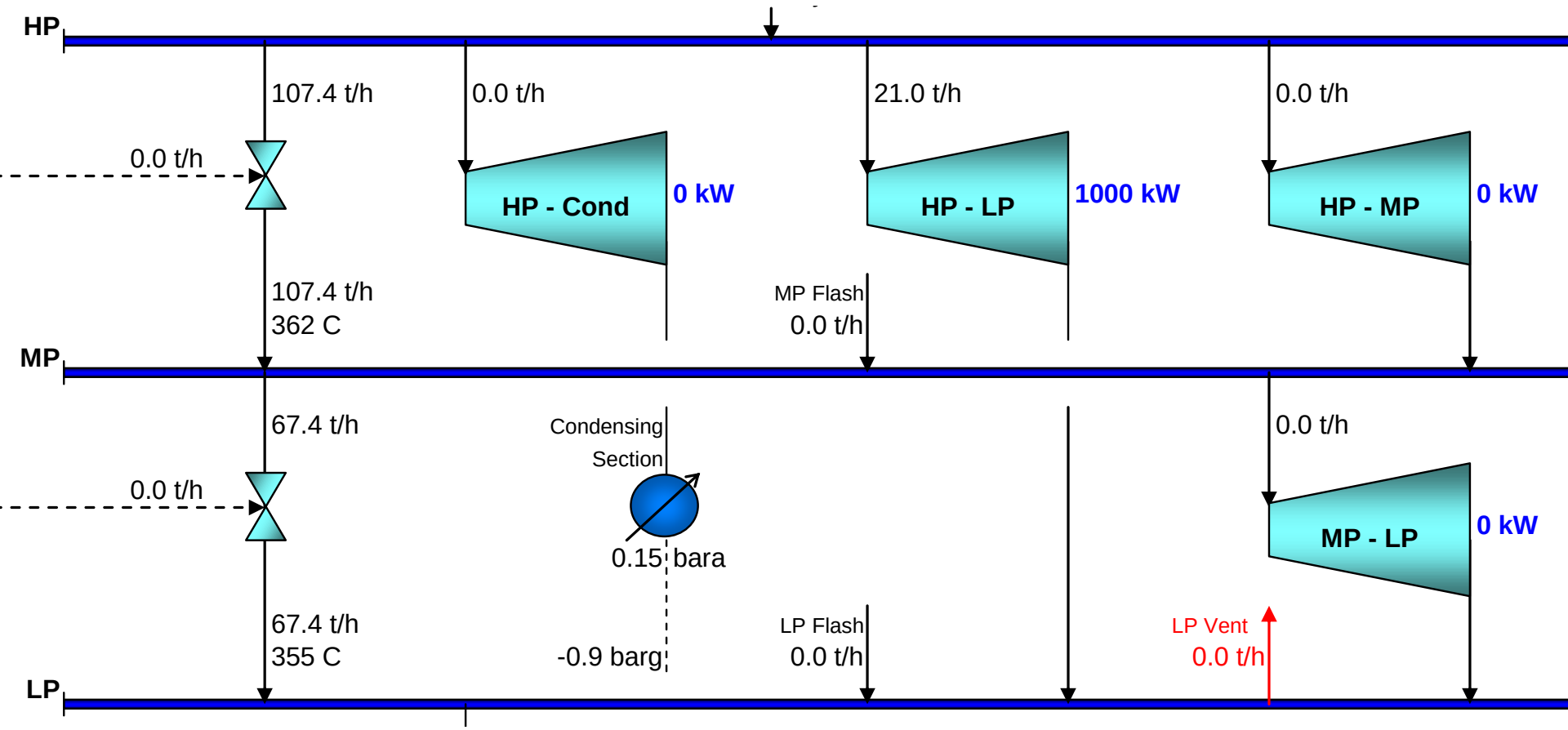


UNIDO 2012, all rights reserved

# Steam Turbines in SSAT

| Steam Turbines | |
|---|---|
| Do you have a steam turbine installed between HP and LP? | Yes |
| Do you have a steam turbine installed between HP and MP? | No |
| Do you have a steam turbine installed between MP and LP? | No |
| Do you have an HP to condensing turbine installed? | No |

- Steam turbines need to be set up in the “Quick Start” section
  - Use the pull down menu to say “Yes” if a particular turbine exists
- Additional information on turbines and their control mechanism is then provided in the “Site Detail” section
- NOTE: The turbine does not have to be ON for inclusion in the system

UNIDO 2012, all rights reserved

# Steam Turbines in SSAT

| HP to LP Steam Turbine(s) | Input Data | Notes/Warnings |
|---|---|---|
| Isentropic efficiency | 35 % | |

Note: If multiple turbines are installed, the operation of the impact turbine (the turbine affected by changes to the system) should be modeled
Note: A generator electrical efficiency of 100% is assumed by the model

| | |
|---|---|
| Select the appropriate turbine operating mode | Option 2 - Fixed operation |

Note: If Option 1 is chosen, the model will preferentially use the HP to LP turbine to balance the LP demand

| | |
|---|---|
| **Option 2 -** How should the fixed turbine operation be defined? | Specify fixed power generation |

| | | |
|---|---|---|
| Option 2 - Fixed steam flow | 50 t/h | |
| **Option 2** - Fixed power generation | 1000 kW | |

| | |
|---|---|
| Option 3 - How do you wish to define the operating range? | Option 3 not selected |

| | | |
|---|---|---|
| Option 3 - Minimum steam flow | 25 t/h | |
| Option 3 - Maximum steam flow | 75 t/h | |
| Option 3 - Minimum power generation | 1500 kW | |
| Option 3 - Maximum power generation | 2500 kW | |

- Each steam turbine included in the system will need to be configured for efficiency & control options

UNIDO 2012, all rights reserved

# Steam Turbines in SSAT

| HP to LP Steam Turbine(s) | Input Data | Notes/Warnings |
|---|---|---|
| Isentropic efficiency | 35 % | |

Note: If multiple turbines are installed, the operation of the impact turbine (the turbine affected by changes to the system) should be modeled
Note: A generator electrical efficiency of 100% is assumed by the model

- Each steam turbine included in the system will need a steam turbine isentropic efficiency
  - Manufacturers' data
  - Calculated from steam input and output conditions for superheated cases
  - Calculated from power generated and steam input and outlet pressure
    - Generator efficiency needs to be included in the calculations
- Turbine operations are satisfied, then low-pressure demands are satisfied with PRV operation

UNIDO 2012, all rights reserved

# Steam Turbines in SSAT

→ Select the appropriate turbine operating mode | Option 2 - Fixed operation ←

Note: If Option 1 is chosen, the model will preferentially use the HP to LP turbine to balance the LP demand

→ **Option 2 -** How should the fixed turbine operation be defined? | Specify fixed power generation ←

- There are four different options to setup the turbine operations
  - Steam flow to the turbine balances the "output" header demand
    - This is also the Default option
  - Turbine set up as fixed operation
    - Fixed steam flow
    - Fixed power generation
  - Turbine setup to operate between minimum and maximum limits
    - Steam flow
    - Power generation
  - Turbine NOT operating

UNIDO 2012, all rights reserved

# Steam Balance Control

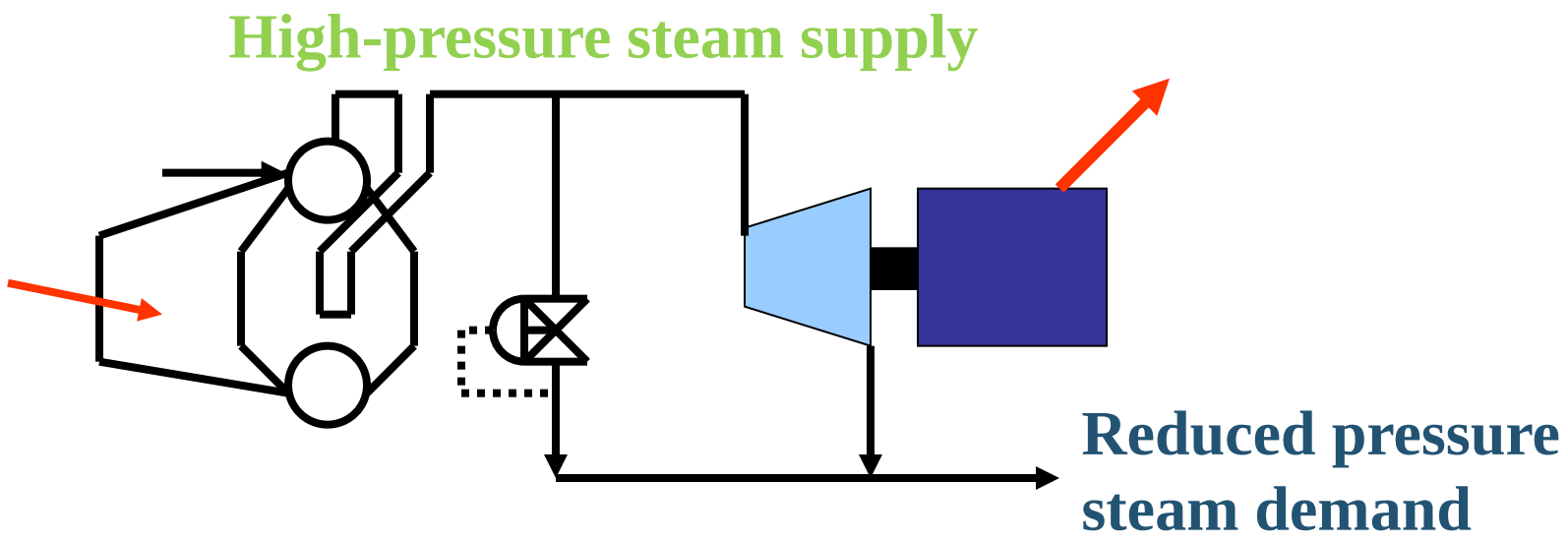


- The SSAT model must be established to accurately describe the **impact** a change in steam demand (or operating conditions) will have on the system
  - The **impact component** must be established
    - Steam can pass through a turbine
    - Steam can pass through a pressure reducing valve

UNIDO 2012, all rights reserved

# Turbine Control of Steam Balance

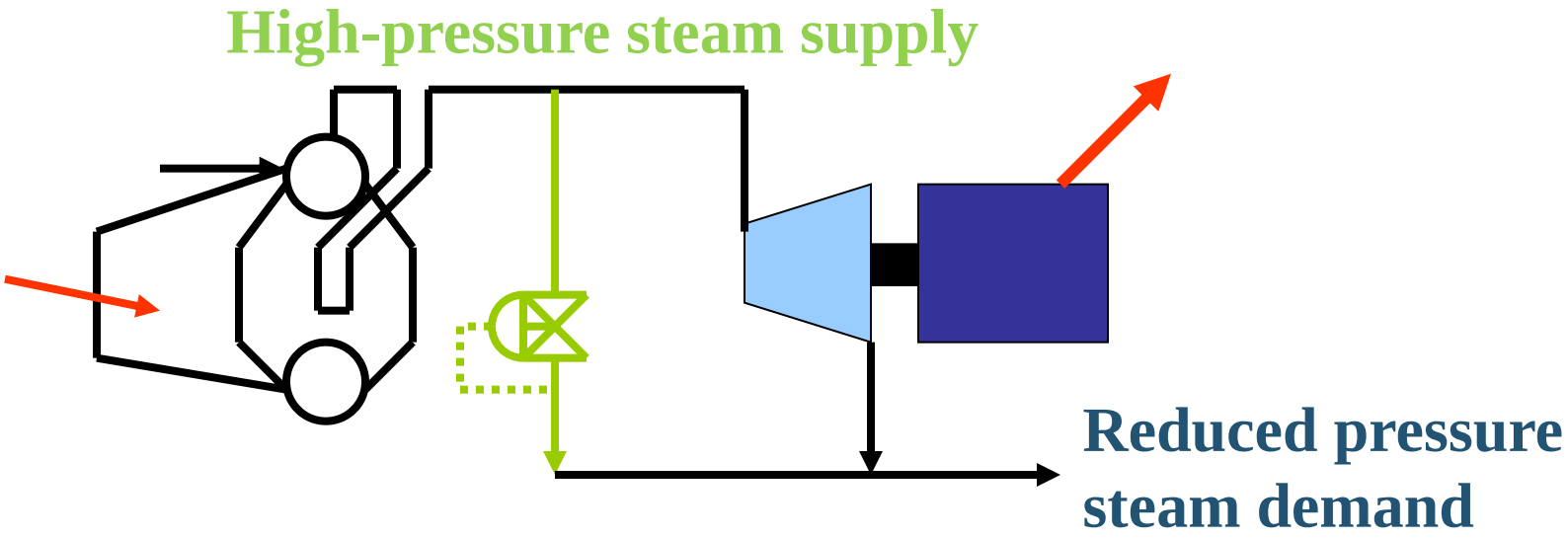


- Turbine balances reduced-pressure header
  - The capacity of the turbine is limitless
  - Any change in low-pressure steam demand will result in a change in steam flow through the turbine

UNIDO 2012, all rights reserved

# Fixed Turbine – PRV Steam Balance Control

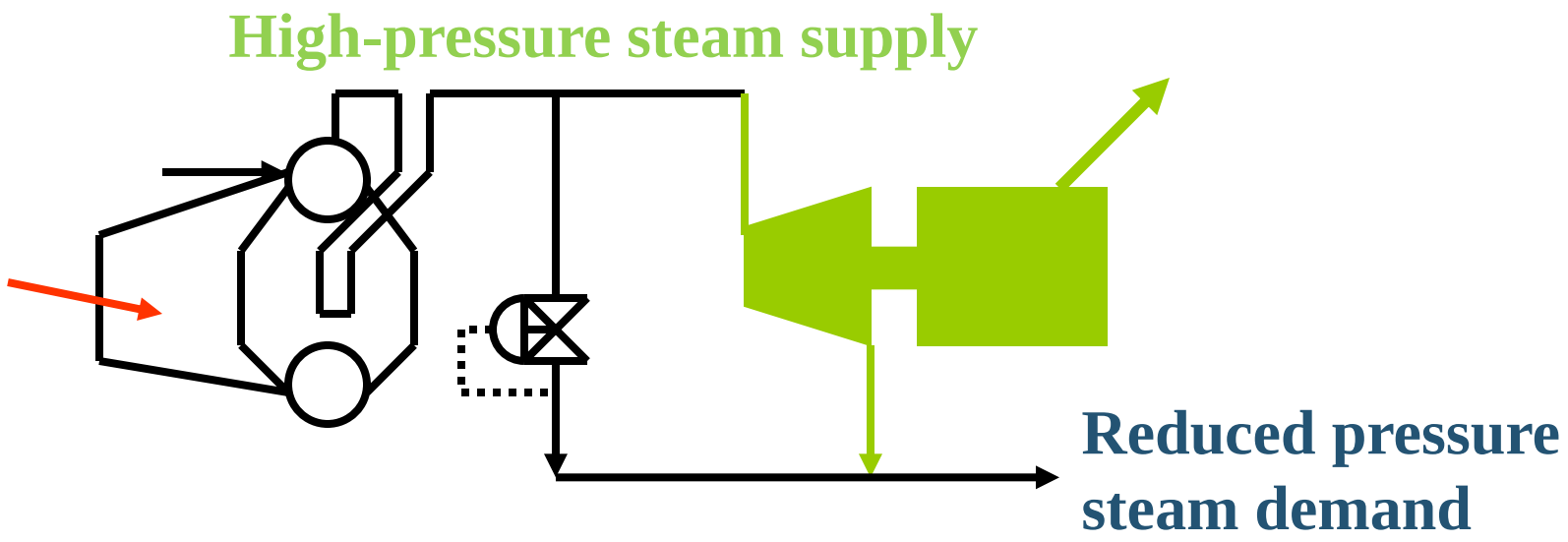


- Turbine is operating based on fixed conditions
  - Steam flow cannot vary through the turbine
  - Any change in low-pressure steam demand will result in a change in steam flow through the PRV
  - Process turbines are typically modeled in this manner

UNIDO 2012, all rights reserved

# Maximum-Minimum Steam Balance Control

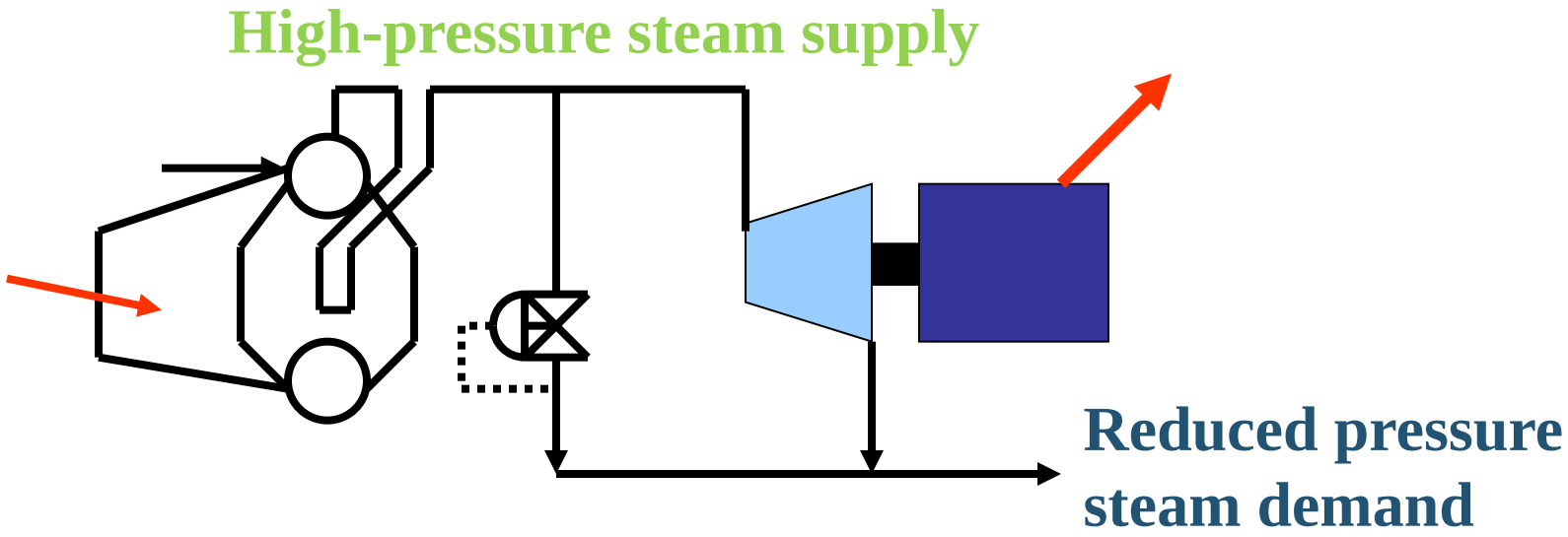


- The turbine can be forced to operate between a minimum and maximum steam flow
  - The PRV will supply additional steam if the turbine capacity limit is reached
  - This provides a realistic limitation based on the capacity of the turbines

UNIDO 2012, all rights reserved

# Turbine On-Off Control

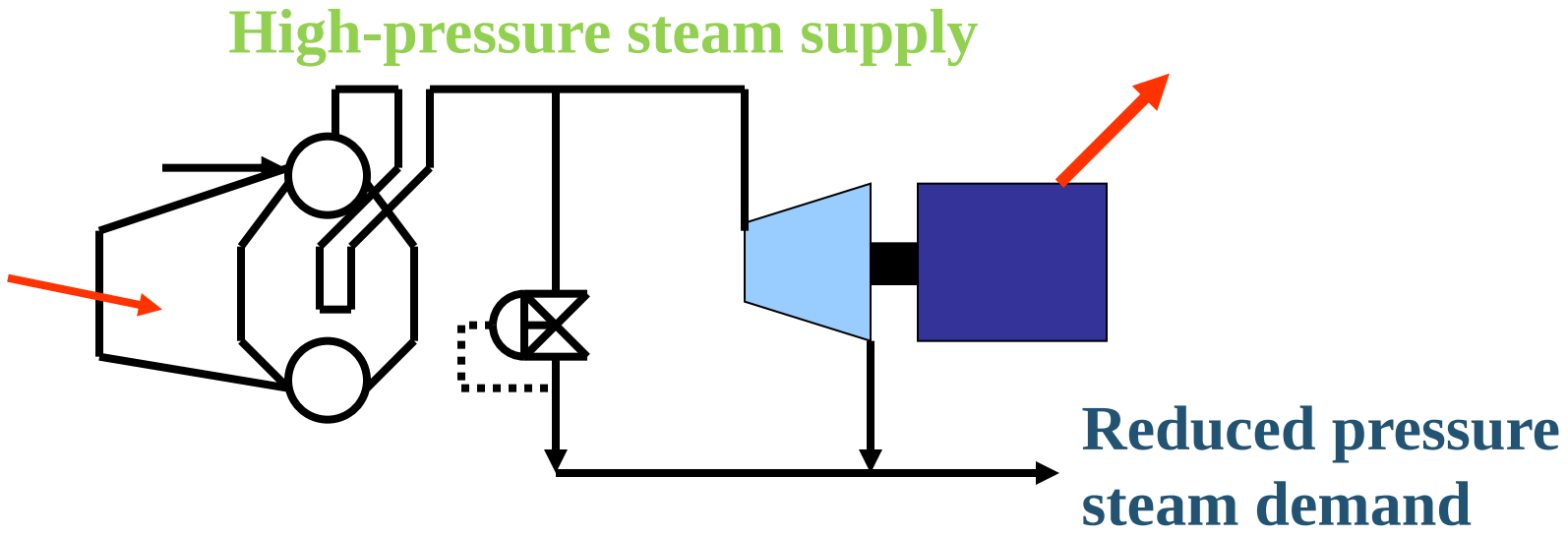


- The turbine can be turned “on” in the input model and “off” in the projects model
  - The turbine can be turned “off” in the input model and “on” in the projects model

UNIDO 2012, all rights reserved

# Turbine Impact Example

**High-pressure steam: 25 bars 375° C**

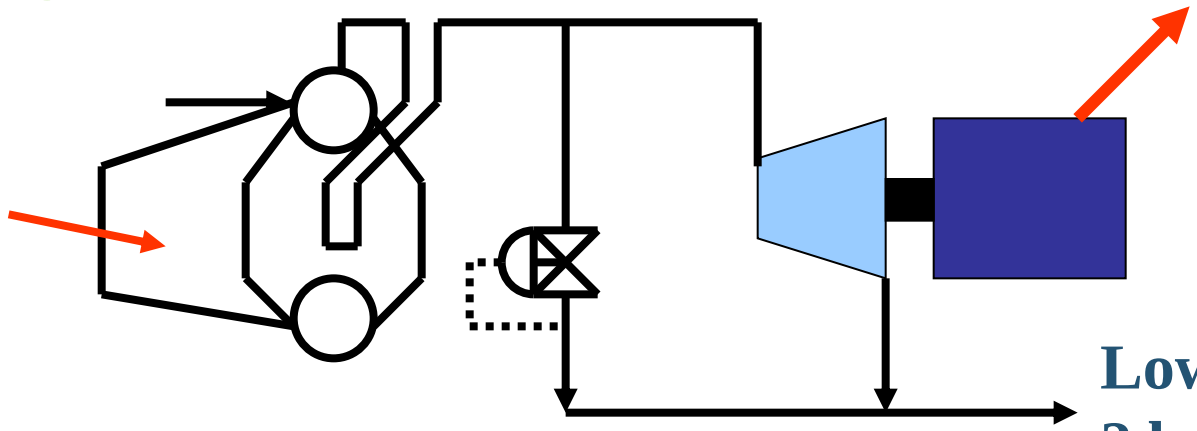

Electrical impact cost: $0.10/kWh

**Low-pressure steam: 2 bars**

Impact boiler: Methane gas ($1.0/Nm$^3$)
Boiler efficiency: 80%

- Open the 3-Header Example System Model and set up the HP-LP turbine with the following configuration
  - Turbine balancing the system
  - Turbine isentropic efficiency = 35%
- Model the economic impact of saving 1 Tph HP and 1 Tph LP steam

UNIDO 2012, all rights reserved

# Turbine Impact Example Results

**Steam System Assessment Tool**

SSAT 3 Header Experts Training Example

**Current Operation**

| Emissions | t/y |
|---|---|
| CO2 | 223126 |
| SO2 | 0 |
| NOx | 442 |

***Model Status : OK***

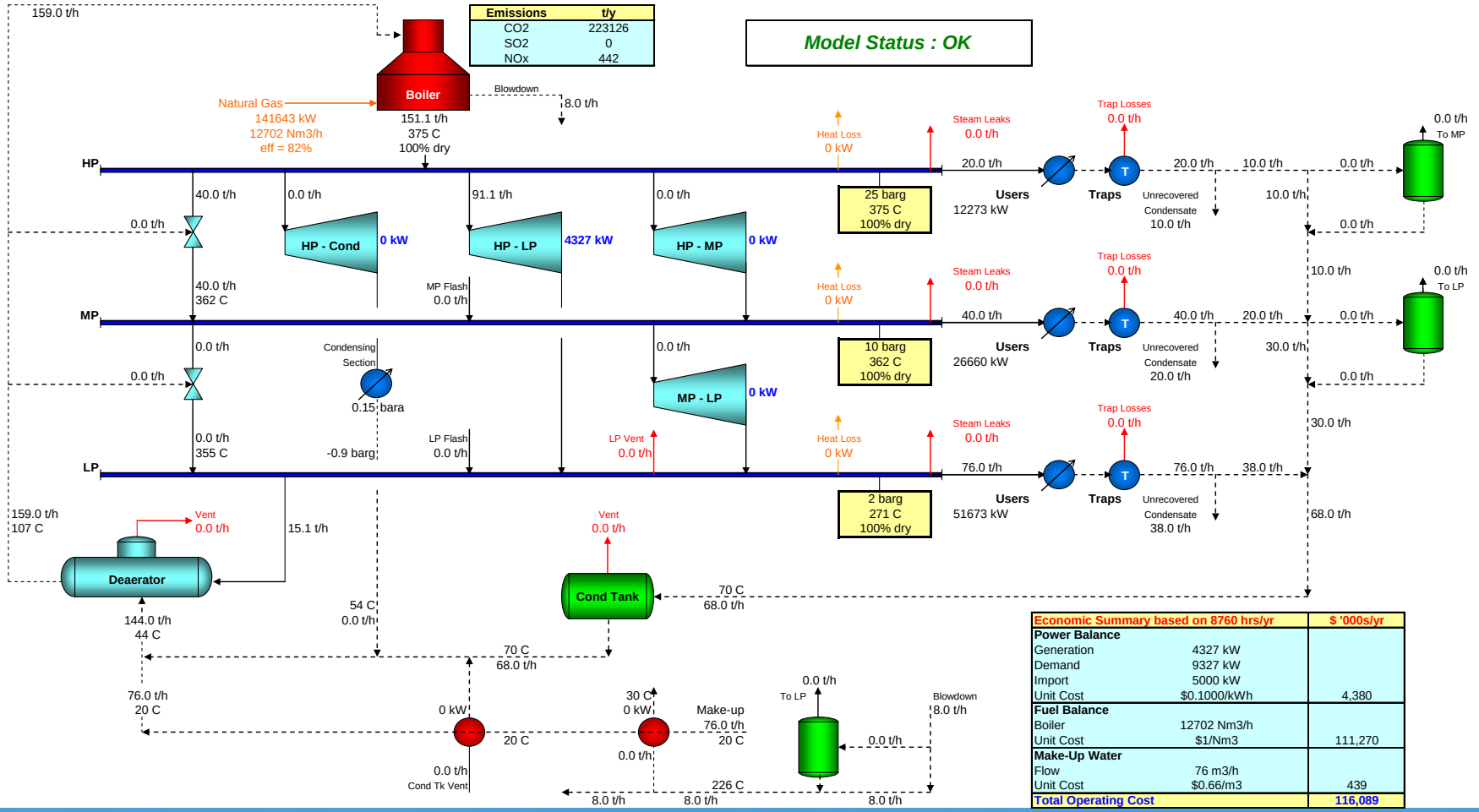


| Economic Summary based on 8760 hrs/yr | | $ '000s/yr |
|---|---|---|
| **Power Balance** | | |
| Generation | 4327 kW | |
| Demand | 9327 kW | |
| Import | 5000 kW | |
| Unit Cost | $0.1000/kWh | 4,380 |
| **Fuel Balance** | | |
| Boiler | 12702 Nm3/h | |
| Unit Cost | $1/Nm3 | 111,270 |
| **Make-Up Water** | | |
| Flow | 76 m3/h | |
| Unit Cost | $0.66/m3 | 439 |
| **Total Operating Cost** | | **116,089** |

UNIDO 2012, all rights reserved

# Turbine Impact Example Results

| Marginal Steam Costs | |
|---|---|
| (based on current operation) | |
| HP ($/t) | 93.24 |
| MP ($/t) | 93.24 |
| LP ($/t) | 88.49 |

$$CostSavings_{1Tph_HP} = 1.0 \times 8{,}760 \times 93.24 = \$816{,}750$$

$$CostSavings_{1Tph_LP} = 1.0 \times 8{,}760 \times 88.49 = \$775{,}000$$

UNIDO 2012, all rights reserved

# Turbine Impact Example

**High-pressure steam: 25 bars 375° C**

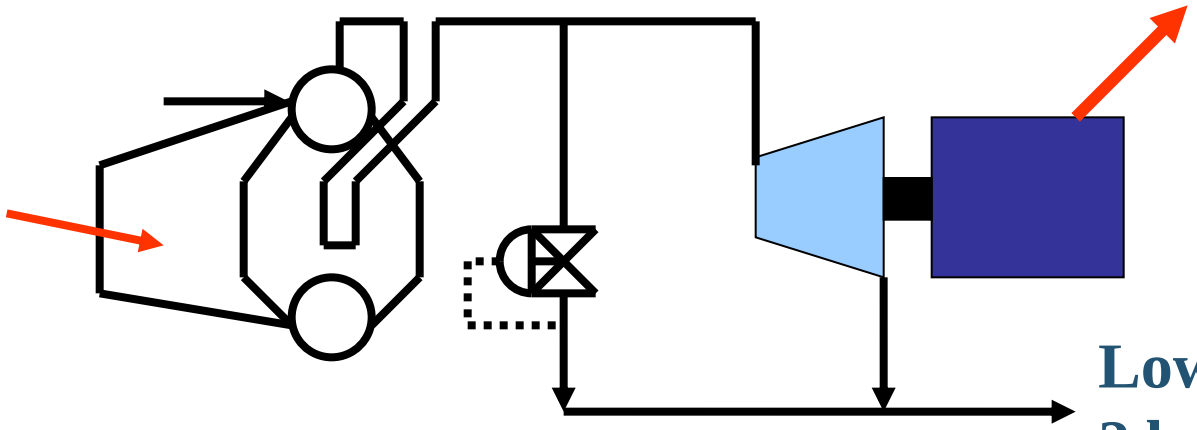

Electrical impact cost: $0.10/kWh

**Low-pressure steam: 2 bars**

Impact boiler: Methane gas ($1.0/Nm$^3$)
Boiler efficiency: 80%

- Open the 3-Header Example System Model and set up the HP-LP turbine with the following configuration
  - MP-LP Pressure Reducing Valve has a flow of ~10 Tph
  - Turbine isentropic efficiency = 35%
- Model the economic impact of saving 1 Tph HP and 1 Tph LP steam

UNIDO 2012, all rights reserved

# Turbine Impact Example Results

**Steam System Assessment Tool**

SSAT 3 Header Experts Training Example

**Current Operation**

| Emissions | t/y |
|---|---|
| CO2 | 222962 |
| SO2 | 0 |
| NOx | 441 |

***Model Status : OK***

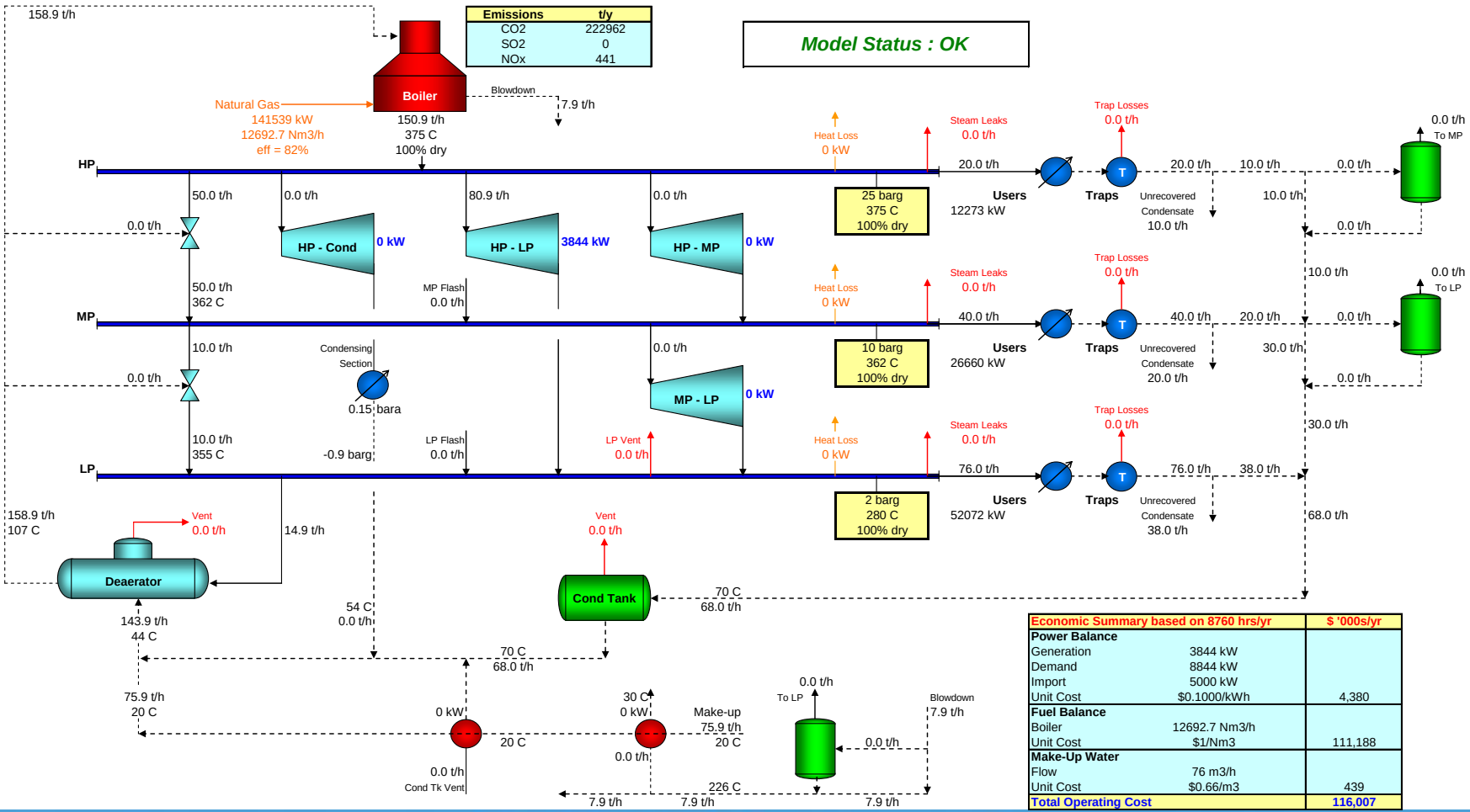


| Economic Summary based on 8760 hrs/yr | | $ '000s/yr |
|---|---|---|
| **Power Balance** | | |
| Generation | 3844 kW | |
| Demand | 8844 kW | |
| Import | 5000 kW | |
| Unit Cost | $0.1000/kWh | 4,380 |
| **Fuel Balance** | | |
| Boiler | 12692.7 Nm3/h | |
| Unit Cost | $1/Nm3 | 111,188 |
| **Make-Up Water** | | |
| Flow | 76 m3/h | |
| Unit Cost | $0.66/m3 | 439 |
| **Total Operating Cost** | | **116,007** |

UNIDO 2012, all rights reserved

# Turbine Impact Example Results

| Marginal Steam Costs | |
|---|---|
| (based on current operation) | |
| HP ($/t) | 93.12 |
| MP ($/t) | 93.12 |
| LP ($/t) | 87.82 |

$$CostSavings_{1Tph_HP} = 1.0 \times 8{,}760 \times 93.12 = \$815{,}700$$

$$CostSavings_{1Tph_LP} = 1.0 \times 8{,}760 \times 87.82 = \$769{,}300$$

UNIDO 2012, all rights reserved

# Turbine Impact Example

**High-pressure steam: 25 bars 375° C**

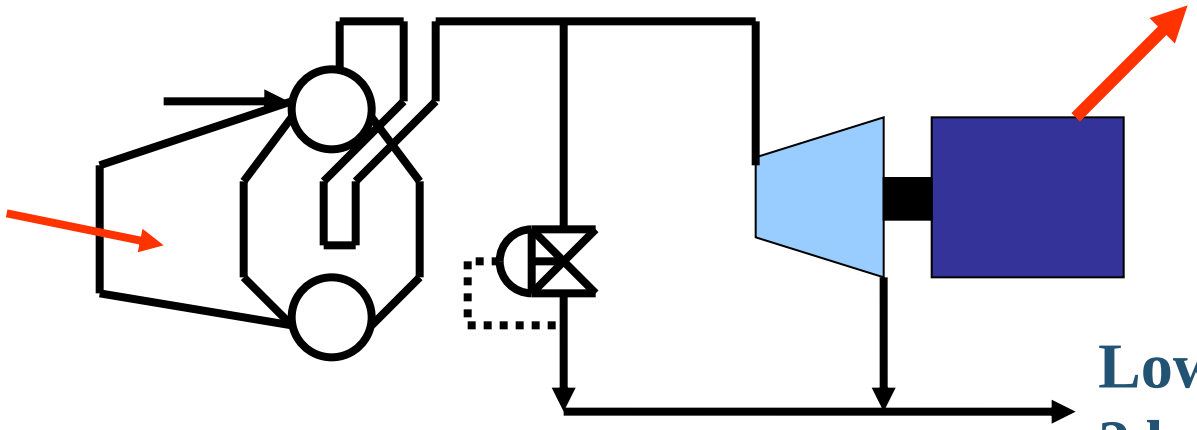

Electrical impact cost: $0.10/kWh

**Low-pressure steam: 2 bars**

Impact boiler: Methane gas ($1.0/Nm$^3$)
Boiler efficiency: 80%

- Open the 3-Header Example System Model and set up the HP-LP turbine with the following configuration
  - Steam turbine flow of ~21.0 Tph
  - Turbine isentropic efficiency = 35%
- Model the economic impact of saving 1 Tph HP and 1 Tph LP steam

UNIDO 2012, all rights reserved

# Turbine Impact Example Results

**Steam System Assessment Tool**

SSAT 3 Header Experts Training Example

**Current Operation**

| Emissions | t/y |
|---|---|
| CO2 | 222034 |
| SO2 | 0 |
| NOx | 440 |

***Model Status : OK***

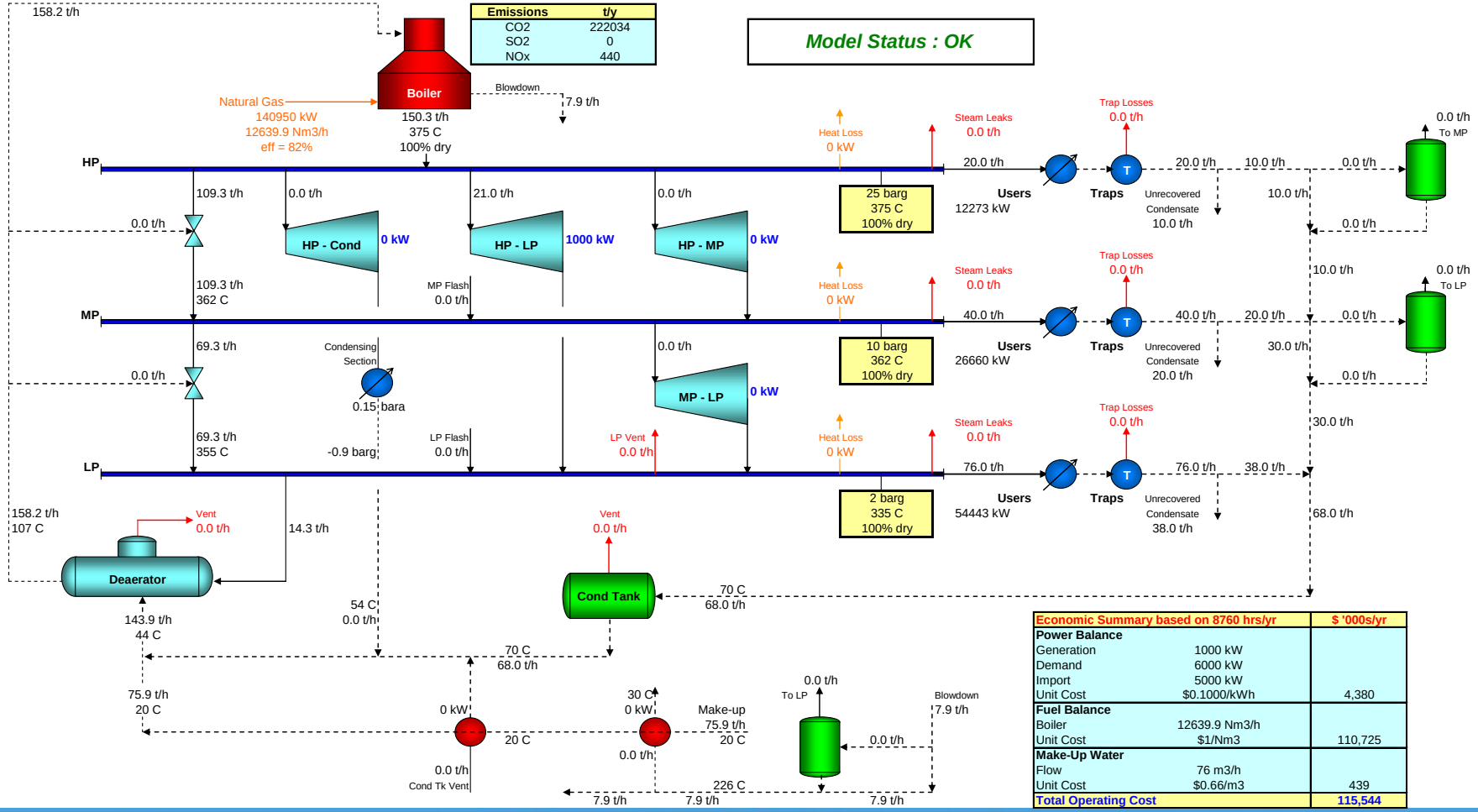


| Economic Summary based on 8760 hrs/yr | | $ '000s/yr |
|---|---|---|
| **Power Balance** | | |
| Generation | 1000 kW | |
| Demand | 6000 kW | |
| Import | 5000 kW | |
| Unit Cost | $0.1000/kWh | 4,380 |
| **Fuel Balance** | | |
| Boiler | 12639.9 Nm3/h | |
| Unit Cost | $1/Nm3 | 110,725 |
| **Make-Up Water** | | |
| Flow | 76 m3/h | |
| Unit Cost | $0.66/m3 | 439 |
| **Total Operating Cost** | | **115,544** |

UNIDO 2012, all rights reserved

# Turbine Impact Example Results

| Marginal Steam Costs | |
|---|---|
| (based on current operation) | |
| HP ($/t) | 93.16 |
| MP ($/t) | 93.16 |
| LP ($/t) | 91.77 |

$$CostSavings_{1Tph_HP} = 1.0 \times 8{,}760 \times 93.16 = \$816{,}000$$

$$CostSavings_{1Tph_LP} = 1.0 \times 8{,}760 \times 91.77 = \$803{,}900$$

UNIDO 2012, all rights reserved

# Backpressure Turbine Economics

- Most industrial systems require thermal energy (not mass flow of steam)
- The turbine will extract energy from the steam and convert it into shaft energy
  - The steam will exit the turbine with a reduced temperature
- The result will be an increased mass flow of steam required to satisfy the thermal demand

UNIDO 2012, all rights reserved

# Condensing Steam Turbines

- Condensing steam turbines often operate with a discharge condition of saturated steam
  - Isentropic efficiency is typically determined by
    - Generator output, steam conditions, and steam flow
    - Estimated by manufacturer's data

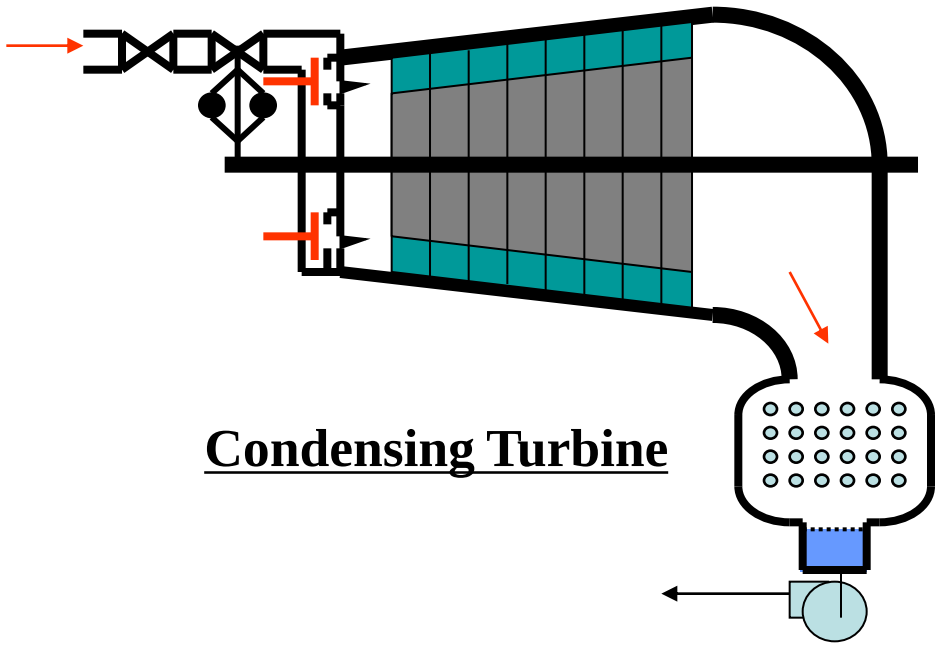


UNIDO 2012, all rights reserved

# Condensing Steam Turbines

- Discharge pressure has a significant effect on power production
  - SSAT units of measure are:
    - bara
    - barg
    - Inches of mercury absolute
    - Inches of mercury vacuum

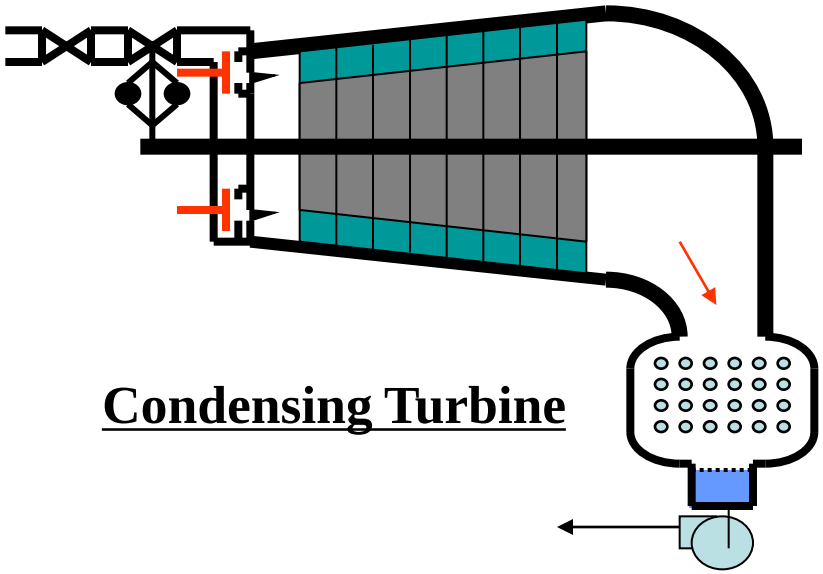


- Condensing turbines are used for
  - Large amount of power generation
  - Driving large mechanical equipment

UNIDO 2012, all rights reserved

# Condensing Steam Turbines in SSAT

| Steam Turbines | |
|---|---|
| Do you have a steam turbine installed between HP and LP? | Yes |
| Do you have a steam turbine installed between HP and MP? | No |
| Do you have a steam turbine installed between MP and LP? | No |
| Do you have an HP to condensing turbine installed? | Yes |

For a **Condensing Turbine**, please define how the turbine operates and then provide supplementary information below:

| | |
|---|---|
| Mode of operation | Option 1 - Define fixed power generation |

| | | |
|---|---|---|
| **Option 1** - Fixed power generation | 1000 kW | |
| Option 2 - Fixed steam flow | 25 t/h | |

- Condensing steam turbine(s) need to be set up in the “Quick Start” section
  - Use the pull down menu to say “Yes” if a condensing turbine exists
  - Information on control mechanism is also required
- Additional information in the “Site Detail” section

UNIDO 2012, all rights reserved

# Condensing Steam Turbines in SSAT

| Steam Turbines | |
|---|---|
| Do you have a steam turbine installed between HP and LP? | Yes |
| Do you have a steam turbine installed between HP and MP? | No |
| Do you have a steam turbine installed between MP and LP? | No |
| Do you have an HP to condensing turbine installed? | Yes |

For a **Condensing Turbine**, please define how the turbine operates and then provide supplementary information below:

| | |
|---|---|
| Mode of operation | Option 1 - Define fixed power generation |

| | | |
|---|---|---|
| **Option 1** - Fixed power generation | 1000 kW | |
| Option 2 - Fixed steam flow | 25 t/h | |

- Condensing turbines have two modes of operation
  - Fixed power generation
    - Most process driven equipment operations will have this configuration
    - NOTE: SSAT assumes 100% generator efficiency
  - Fixed steam flow

UNIDO 2012, all rights reserved

# Condensing Steam Turbines in SSAT

Configure the operation of your HP to Condensing turbine(s) using the options below:

| HP to Condensing Steam Turbine(s) | Input Data | Notes/Warnings |
|---|---|---|
| Isentropic efficiency | 65 % | |

Note: If multiple turbines are installed, their data should be combined to allow them to be modeled as a single turbine

Note: A generator electrical efficiency of 100% is assumed by the model

| | | |
|---|---|---|
| Select the units of measure to specify the condenser pressure | | bara |
| Condenser pressure (bara) | 0.15 | |

- Condensing turbine isentropic efficiency is required
  - Manufacturers' data
  - Calculated from steam inlet, flow and power generated
- Condensing turbine outlet (discharge) pressure
  - Can be provided in either of the four units
  - Equivalent to surface condenser pressure

UNIDO 2012, all rights reserved

# Condensing Turbine Impact Example

**High-pressure steam: 25 bars 375° C**

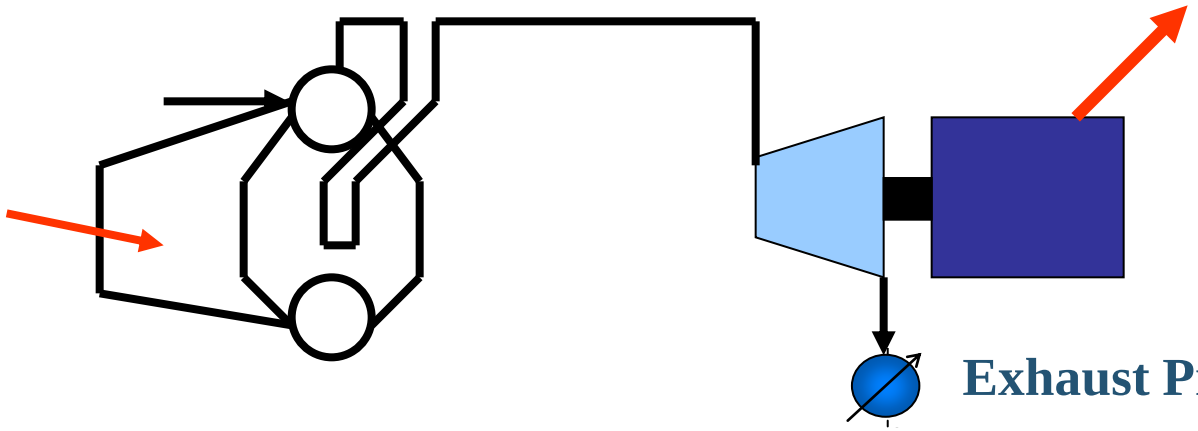

Electrical impact cost: $0.10/kWh

**Exhaust Pressure: 0.15 bara**

Impact boiler: Methane gas: $1.0/Nm$^3$
Boiler efficiency: 80%

- Open the 3-Header Example System Model and set up the condensing turbine with the following configuration
  - Fixed power generation = 950 kW
  - Generator efficiency = 95%
  - Turbine isentropic efficiency = 65%

UNIDO 2012, all rights reserved

# Condensing Turbine Example Results

**Steam System Assessment Tool**

SSAT 3 Header Experts Training Example

**Current Operation**

| Emissions | t/y |
|---|---|
| CO2 | 231510 |
| SO2 | 0 |
| NOx | 458 |

***Model Status : OK***

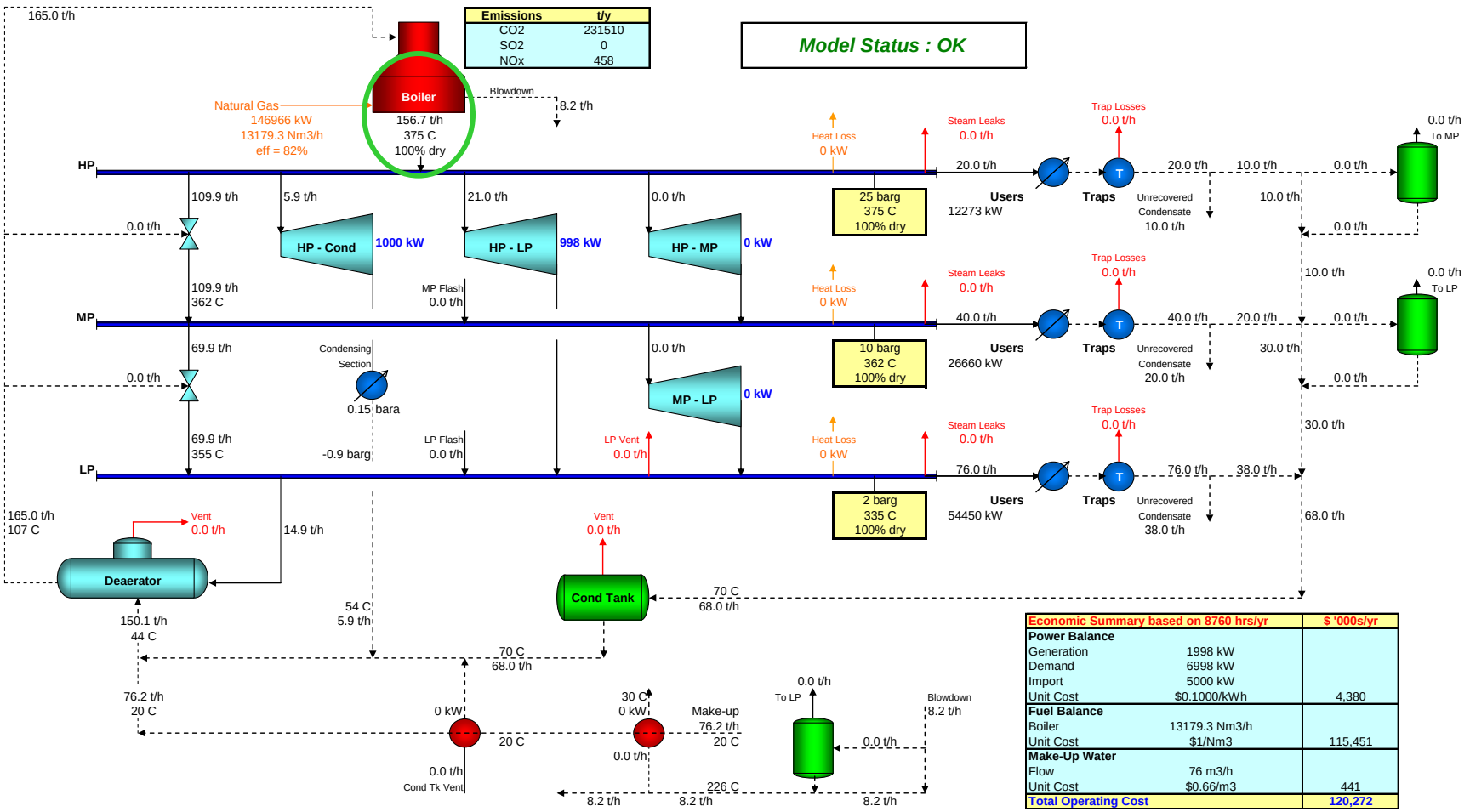


| Economic Summary based on 8760 hrs/yr | | $ '000s/yr |
|---|---|---|
| **Power Balance** | | |
| Generation | 1998 kW | |
| Demand | 6998 kW | |
| Import | 5000 kW | |
| Unit Cost | $0.1000/kWh | 4,380 |
| **Fuel Balance** | | |
| Boiler | 13179.3 Nm3/h | |
| Unit Cost | $1/Nm3 | 115,451 |
| **Make-Up Water** | | |
| Flow | 76 m3/h | |
| Unit Cost | $0.66/m3 | 441 |
| **Total Operating Cost** | | **120,272** |

UNIDO 2012, all rights reserved

# Condensing Turbine Example Results

**Steam System Assessment Tool**

SSAT 3 Header Experts Training Example

**Current Operation**

| Emissions | t/y |
|---|---|
| CO2 | 221739 |
| SO2 | 0 |
| NOx | 439 |

***Model Status : OK***

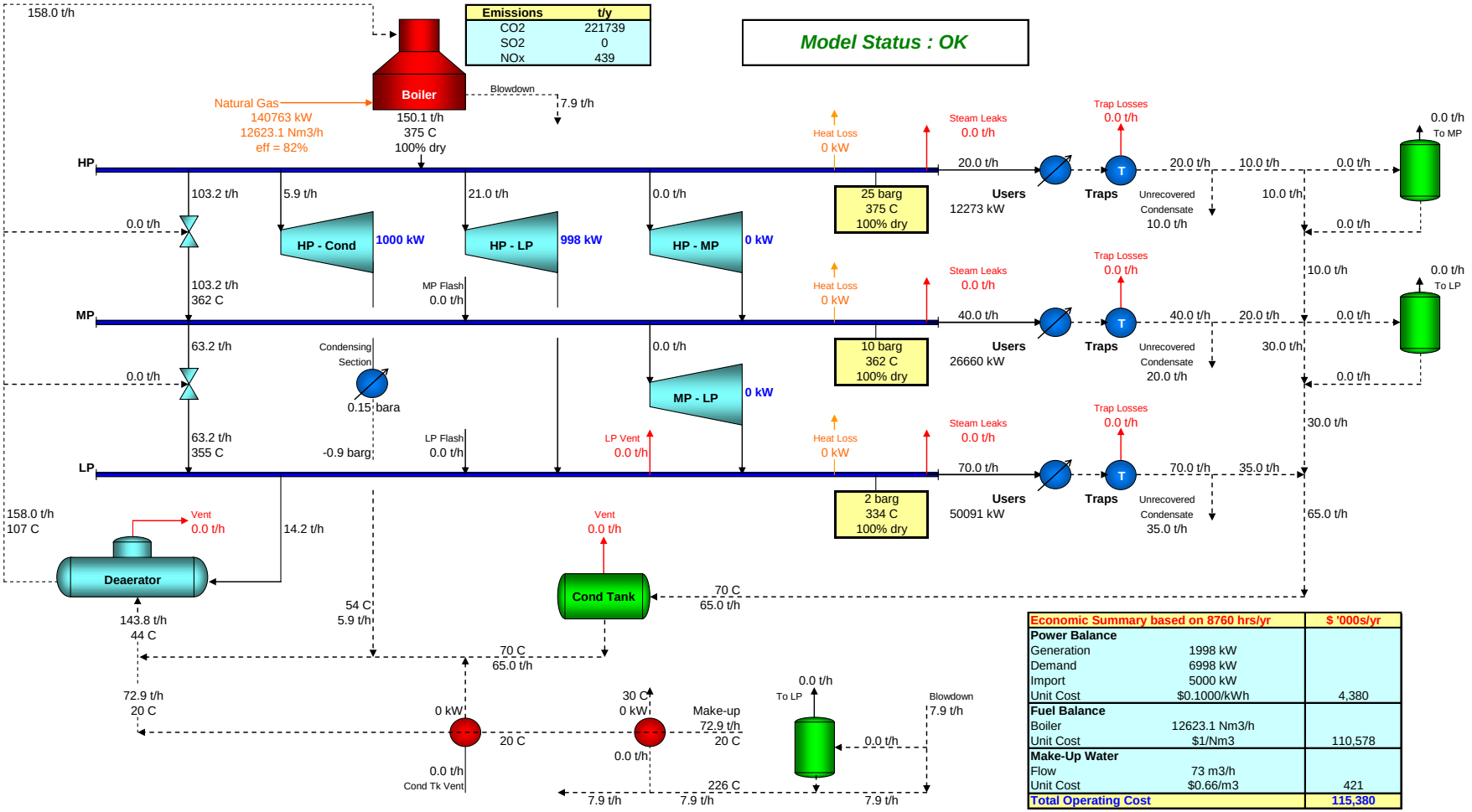


| Economic Summary based on 8760 hrs/yr | | $ '000s/yr |
|---|---|---|
| **Power Balance** | | |
| Generation | 1998 kW | |
| Demand | 6998 kW | |
| Import | 5000 kW | |
| Unit Cost | $0.1000/kWh | 4,380 |
| **Fuel Balance** | | |
| Boiler | 12623.1 Nm3/h | |
| Unit Cost | $1/Nm3 | 110,578 |
| **Make-Up Water** | | |
| Flow | 73 m3/h | |
| Unit Cost | $0.66/m3 | 421 |
| **Total Operating Cost** | | **115,380** |

UNIDO 2012, all rights reserved

# Example System Model

- All the model "Inputs" are complete
- The 3-header model
  - Closely represents steam flows and steam balance on the headers as would be in the operating case
  - Accurately models the impact (marginal) steam costs of the system
  - DOES NOT represent total utility costs, emissions, etc.
    - NOTE: Impact fuel is used for modeling
  - Is ready to be used to accurately reflect economic impacts of energy saving and optimization opportunities in the steam system
- Make sure it is **SAVED**!

UNIDO 2012, all rights reserved