Industrial Steam System Optimization

Experts Training

Developed by:
Ven Venkatesan, P.E., CEM
Hudson Technologies Company, USA
Greg Harrell, Ph.D., P.E.
Energy Management Services, USA
Riyaz Papar, P.E., CEM
Hudson Technologies Company, USA

UNIDO 2012, all rights reserved

Acknowledgments

- UNIDO Team – Vienna, Austria
- UNIDO-Climate Change Office Team – Moldova
- United States Department of Energy, USA
- Oak Ridge National Laboratory, USA
- California Energy Commission, USA
- Sudzucker Moldova SA-Drokhia, Moldova
- Nature Bravo Moldova SA-Cupicini, Moldova
- Del Monte Foods, Modesto Plant, CA, USA
- Chrysler Corporation, St. Louis, MO, USA
- Jim Munch Process Systems, Washington, USA
- Energy Concepts Company, Annapolis, MD, USA

UNIDO 2012, all rights reserved

Training Objectives

- To train end-users and consulting engineers to become national experts for assessing and optimizing steam systems

- Help industry optimize steam systems and achieve energy and cost savings through
  - Proper operation and controls
  - System maintenance
  - Appropriate process uses of steam
  - Cogeneration and
  - Application of state-of-the-art technologies

UNIDO 2012, all rights reserved

Training Objectives

- To conduct field assessments and identify projects to demonstrate actual energy and cost savings achievable using the Systems Approach

- Build expertise in the use of US DOE publicly available steam system optimization assessment software tools

UNIDO 2012, all rights reserved

Training Outline
Day 3

- Review of topics from 2-Day User Training
- ASME Steam Standard & Assessment Protocol
- Student Exercise - An industrial Steam System energy assessment
- Elements of a Steam Energy Assessment Report
- Evaluating certain steam system configurations
  - Extraction turbines
  - Waste heat recovery
  - Heat exchangers
  - Thermocompressors
  - Absorption chillers

UNIDO 2012, all rights reserved

Training Outline
Day 3

- Presentation of select Case Studies from SSO
- HOST Plant Information – Overview of the plant to be assessed
- Instrumentation Briefing and Demonstration of all the instruments to be used in the assessment
- Tools & Resources
- Conclusions

UNIDO 2012, all rights reserved

Training Outline
Day 4 & 5

- Host Plant SSO Assessment
  - International Experts and national expert trainees visit the Host plant
  - National expert trainees are divided into teams and provided portable instrumentation to be used in the steam system assessment
  - International experts works w/expert trainees and identifies potential improvement opportunity areas
  - Due-diligence including data gathering is done onsite
  - National expert trainees are given hands-on opportunity and training to do a steam system assessment
  - Report Generation

UNIDO 2012, all rights reserved

Training Outline
Post Assessment

- Next 4 months
  - Candidate Plant
    - Each national expert trainee works with an assigned candidate plant to conduct a steam system optimization energy assessment
    - Works with international expert to review the assessments, observations, models and results
    - Completes final report and presents to plant
  - Webinars / Phone conferences
    - Technical support and guidance provided by international experts to national expert trainees
  - Ongoing review of expert trainee and their level of SSO understanding

UNIDO 2012, all rights reserved

Training Outline
Post Assessment

- After 4 months
  - ½ Day Review
    - Classroom training to review fundamentals of SSO
    - Functionality and use of steam system tools
    - Questions and Answers
    - Discussion of experiences from Candidate plants
  - Qualifying Exam
    - National expert trainees will take a 4-hour exam as their final qualification test before they are qualified as SSO NATIONAL EXPERT

UNIDO 2012, all rights reserved

Review of 2-Day User Training

Systems Approach

BestPractices in Steam Systems

Key Points & Action Items

Specific Q&A from the 2-Day User Training

UNIDO 2012, all rights reserved

The Systems Approach

- Key to cost-effective plant utility system operations and maintenance
- Pay attention to the system as a whole, not just to individual pieces of equipment
- Analyze both the supply and demand sides of systems and how they interact
- Most industrial systems will need a Systems Approach for proper analysis
- Will lead to significantly higher energy and cost savings than a "component level analysis"

UNIDO 2012, all rights reserved

The Systems Approach

- **Establish** current system conditions, operating parameters, and system energy use
- **Investigate** how the total system presently operates
- **Identify** potential areas where system operation can be improved
- **Analyze** the impacts of potential improvements to the plant system
- **Implement** system improvements that meet plant operational and financial criteria
- Continue to **monitor** overall system performance

UNIDO 2012, all rights reserved

Generic Steam System

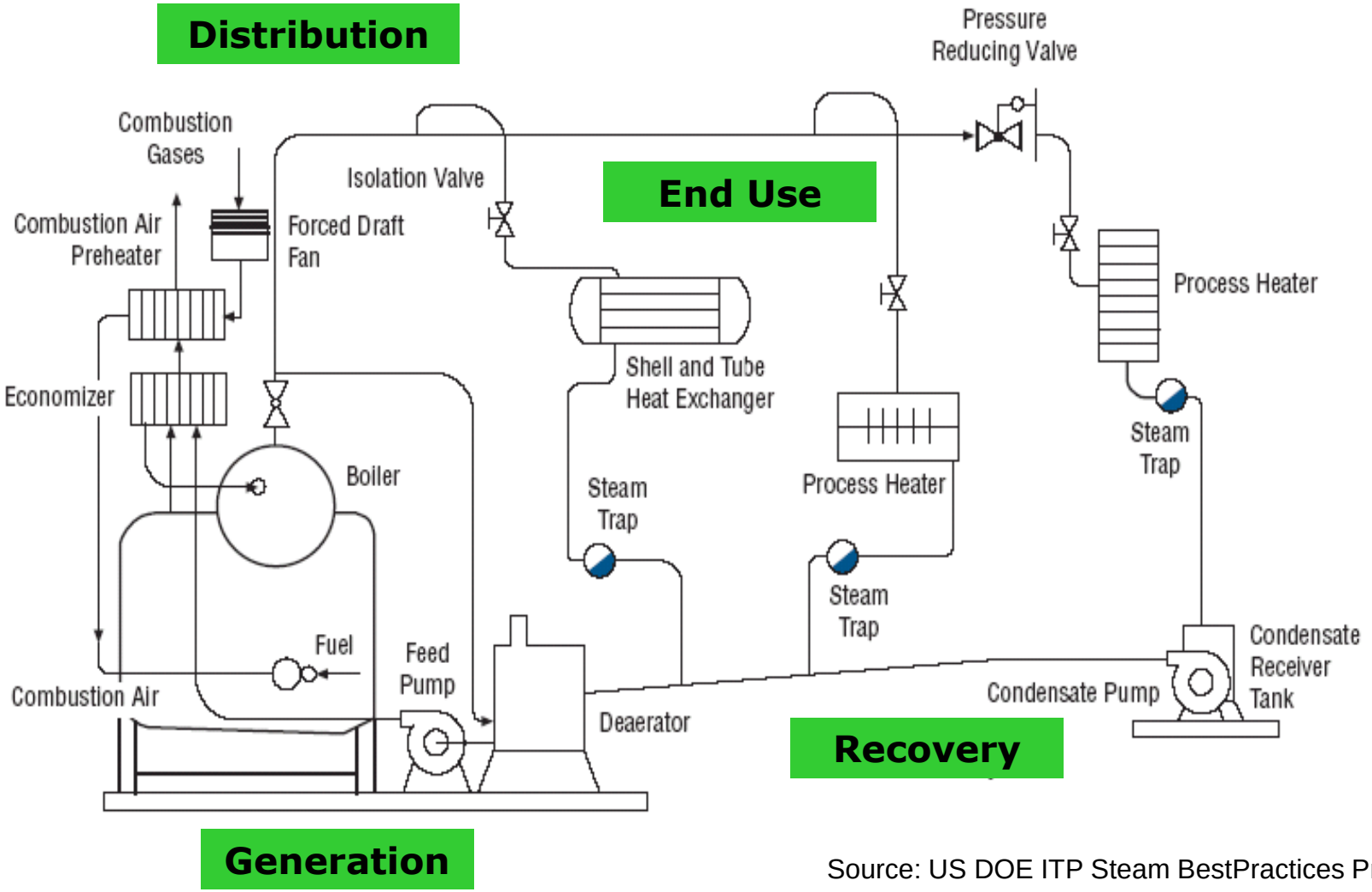

Source: US DOE ITP Steam BestPractices Program

UNIDO 2012, all rights reserved

Key Points / Action Items - Fundamentals

1. *Use a Systems Approach to optimize steam systems*
2. *There are four major areas of a steam system – Generation, Distribution, End-Use & Recovery*
3. *An understanding of the laws of thermodynamics, heat transfer, fluid flow and steam properties is required for a steam system analysis*
4. *Use a systematic approach (gap analysis, comparison to BestPractices) to identify potential energy saving opportunities that may exist in steam systems*

UNIDO 2012, all rights reserved

Common BestPractices - Generation

- Minimize excess air
- Install heat recovery equipment
- Clean boiler heat transfer surfaces
- Improve water treatment to reduce boiler blowdown
- Recover energy from boiler blowdown
- Add/restore boiler refractory
- Minimize the number of operating boilers
- Investigate fuel switching
- Optimize deaerator vent rate

Source: US DOE BestPractices Steam System Sourcebook

UNIDO 2012, all rights reserved

Key Points / Action Items – Boiler Efficiency

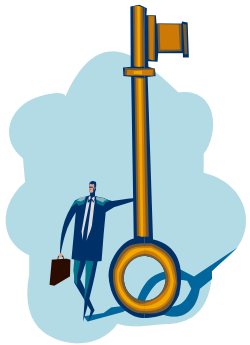

1. *Determine boiler plant operating cost*
2. *Determine unit cost of steam generation*
3. *Determine boiler operating efficiency*

$$\eta_{boiler} = \frac{m_{steam}\left(h_{steam} - h_{feedwater}\right)}{m_{fuel}\, HHV_{fuel}} \times 100$$

4. *There are three major losses in steam generation – shell loss, blowdown loss and stack loss*

$$\eta_{boiler} = 100 - \lambda_{shell} - \lambda_{blowdown} - \lambda_{stack} - \lambda_{other}$$

UNIDO 2012, all rights reserved

Key Points / Action Items – Shell Loss

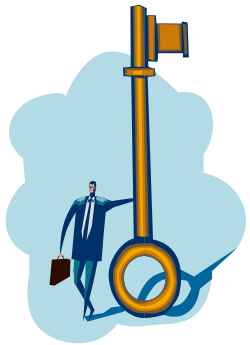

1. *Search for "hot spots"*
2. *Measure boiler surface temperatures*
   - *Infrared thermography*
   - *Typical surface temperature should range between 55 ℃ and 70 ℃*
3. *Repair refractory*
4. *Monitor surface cladding integrity*
5. *Reduced boiler load can present an opportunity*
   - *Minimize number of operating boilers*

UNIDO 2012, all rights reserved

Key Points / Action Items – Blowdown Loss

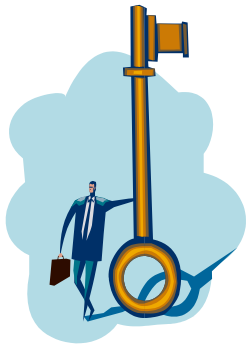

1. *Estimate amount of blowdown using boiler and feedwater conductivities*
2. *Quantify the boiler and system-level energy loss due to blowdown*
3. *Evaluate installation of an automatic blowdown controller*
4. *Evaluate and install flash steam and heat recovery equipment*
5. *Work closely with plant's water chemists to maintain and manage appropriate blowdown*

UNIDO 2012, all rights reserved

Key Points / Action Items – Stack Loss

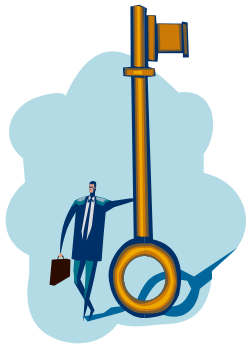

1. *Monitor and record flue gas temperature with respect to:*
   - *Boiler load*
   - *Ambient temperature*
   - *Flue gas oxygen content*
2. *Compare flue gas temperature to previous, similar operating conditions*
3. *Maintain appropriate fire-side cleaning*
4. *Maintain appropriate water chemistry*
5. *Evaluate heat recovery component savings potential*

UNIDO 2012, all rights reserved

Key Points / Action Items – Stack Loss

1. *Combustion management principles:*
   - *Add enough oxygen to react all of the fuel*
   - *Minimize the amount of extra air*
   - *Monitor combustibles to identify problems*
2. *Measure the oxygen content of boiler exhaust gas*
3. *Control oxygen content within a minimum and maximum range*
   - *Continuous - automatic O_2 trim control*
   - *Positioning control*
4. *Challenge the control range*
   - *Control upgrade*
   - *Combustion tuning*

UNIDO 2012, all rights reserved

Key Points / Action Items – Boiler Plant Optimization

1. *Use a steam system model based on the laws of thermodynamics to quantify energy and cost savings opportunities*

2. *Fuel switching and boiler plant operations are excellent areas for optimization of steam systems – significant cost savings can be realized by applying optimal operating strategies*

3. *Each application will need an independent evaluation – there are NO thumb rules!*

UNIDO 2012, all rights reserved

Common BestPractices - Distribution

- Repair steam leaks
- Minimize vented steam
- Ensure that steam system piping, valves, fittings and vessels are well insulated
- Isolate steam from unused lines
- Minimize flows through pressure reducing stations
- Reduce pressure drop in headers
- Drain condensate from steam headers

Source: US DOE BestPractices Steam System Sourcebook

UNIDO 2012, all rights reserved

Key Points / Action Items – Leaks

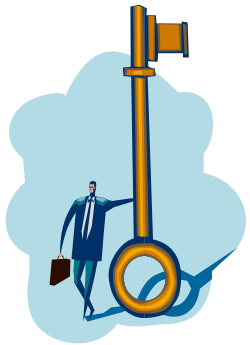

1. *Steam leaks occur in all plants and a continuous improvement type steam leak management program should be implemented in industrial plants*

2. *An "order of magnitude" steam loss estimate can provide enough information to determine if the repair must be made immediately, during a future shutdown, or online*

UNIDO 2012, all rights reserved

Key Points / Action Items - Insulation

1. *There are several reasons for damaged or missing insulation*
2. *These areas result in significant energy losses and a continuous improvement type insulation appraisal (audit) program should be implemented in industrial plants*
3. *Some basic instruments, heat transfer models and process data are required to quantify the economic impact of missing or damaged insulation*

UNIDO 2012, all rights reserved

Common BestPractices – End-Use

- Reduce steam usage by a process
  - Improving the efficiency of the process
  - Shifting steam demand to a waste heat source
- Reduce the steam pressure needed by process, especially in cogeneration systems
- Upgrade low pressure (or waste) steam to supply process demands
- Process integration leading to overall energy optimization of the plant

Source: US DOE BestPractices Steam System Sourcebook

UNIDO 2012, all rights reserved

Key Points / Action Items – End Use

1. *There are several end-uses of steam in industrial plants*
2. *Do a steam end-use balance in an industrial plant and identify the largest steam end-users in a plant*
3. *Reduce steam end-use by*
   - *Improving the efficiency of the process*
   - *Shifting steam demand to a waste heat source or lower pressure steam available in the plant*

UNIDO 2012, all rights reserved

Key Points / Action Items – Heat Exchangers

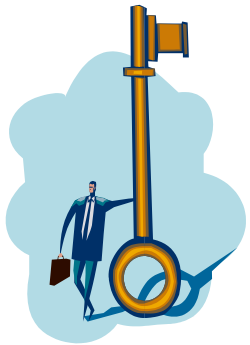

1. *Heat exchangers have a 1st Law efficiency of ~100%*
2. *Heat exchanger InEffectiveness leads to significant system level energy loss*
3. *Monitor and trend heat exchanger effectiveness by measuring inlet and outlet temperatures and calculating U-values*
4. *Clean heat exchangers on a periodic basis to minimize fouling build-up*

UNIDO 2012, all rights reserved

Key Points / Action Items – Process/Utility Integration

1. *Upgrade low pressure (or waste) steam to supply process demands*
2. *Several plants need heating and cooling for process*
3. *Process integration can lead to significant energy savings opportunities and plant optimization*
4. *These opportunities will need significantly higher amounts of due-diligence*

UNIDO 2012, all rights reserved

Common BestPractices - Recovery

- Implement an effective steam-trap management and maintenance program
- Recover as much as possible of available condensate
- Recover condensate at the highest possible thermal energy
- Flash high-pressure condensate to make low-pressure steam

Source: US DOE BestPractices Steam System Sourcebook

UNIDO 2012, all rights reserved

Key Points / Action Items – Steam Traps

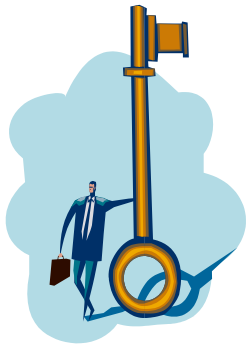

1. *There are different kinds of steam traps and hence, functionality and principles of operation must be understood*
2. *Major steam trap failure modes - open / closed*
3. *An effective steam trap management program must be in place*
4. *There are several commercially available tools for steam trap investigations*
5. *Conduct a steam trap audit at least once a year and repair/replace defective traps*
6. *Steam trap manufacturers are a valuable resource*

UNIDO 2012, all rights reserved

Key Points / Action Items – Condensate Recovery

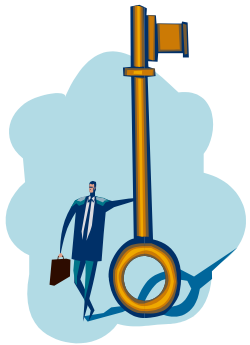

1. *Returning condensate*
   - *Reduces energy*
   - *Reduces make-up water*
   - *Reduces chemicals for water treatment*
   - *Reduces quenching water*
   - *May reduce blowdown*
2. *Condensate recovery is often neglected but it can provide significant energy savings*
3. *Quantify the amount of condensate being recovered in a plant using a simple mass balance on the entire steam system*
4. *Identify potential areas of condensate recovery*

UNIDO 2012, all rights reserved

Common BestPractices – Cogeneration

- Process and utility integration leads to overall energy optimization of the plant
- Install backpressure turbines in parallel with pressure letdown stations and minimize flow through letdown stations
- Evaluate backpressure turbine applications for direct mechanical drives
- Evaluate condensing turbines and optimize their operations to maintain design conditions
- Condensing turbines can serve as a system balance mechanism especially, in industries which have significant waste heat steam generation

Source: US DOE BestPractices Steam System Sourcebook

UNIDO 2012, all rights reserved

Key Points / Action Items – Backpressure Turbines

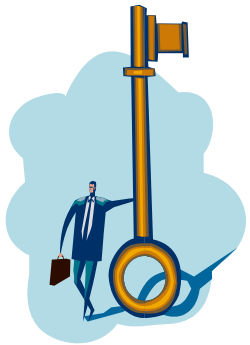

1. *Backpressure turbines are used instead of pressure letdown stations*
2. *Turbine efficiency is NOT 1st law efficiency but a comparison of actual turbine versus an ideal turbine*
3. *Continuous operations with a simultaneous thermal and electric demand are good candidates for backpressure turbines*
4. *Each facility analysis is unique and will depend on several economic as well as operating factors*
5. *Turbine analysis will need a solid thermodynamic steam system model*

UNIDO 2012, all rights reserved

Key Points / Action Items – Condensing Turbines

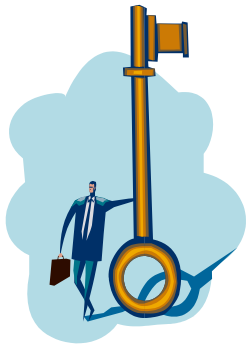

1. *Condensing turbines are used strictly for power generation or driving large mechanical equipment*
2. *They serve niche applications in the industry*
3. *Condensing turbines provide maximum shaft power per unit of steam flow*
4. *Each facility analysis is unique and will depend on several economic as well as operating factors*
5. *Turbine analysis will need a solid thermodynamic steam system model*

UNIDO 2012, all rights reserved

Personal Goals

- Any major issues or concerns as regards the course material, timeline, etc.
- Identification of possible areas which need more in-depth coverage based on the interests of the attendees
- Questions or Discussions from the 2-Day User Training
  - Specific topics
  - US DOE Steam BestPractices Tools Suite

UNIDO 2012, all rights reserved

Industrial Steam System Energy Assessment

UNIDO 2012, all rights reserved

Industrial Energy Assessment

- There are several levels of industrial plant energy assessments (audits)
  - Overall plant-wide
  - System focused – steam, compressed air…..
  - 1-day, 3-day……
- But the overall goal is typically, focused on reductions in energy usage (and/or intensity)
- Identification of energy savings opportunities and path to implementation
- Expectations vary significantly between plant personnel and energy auditor

UNIDO 2012, all rights reserved

Energy Assessment Standard for Steam Systems

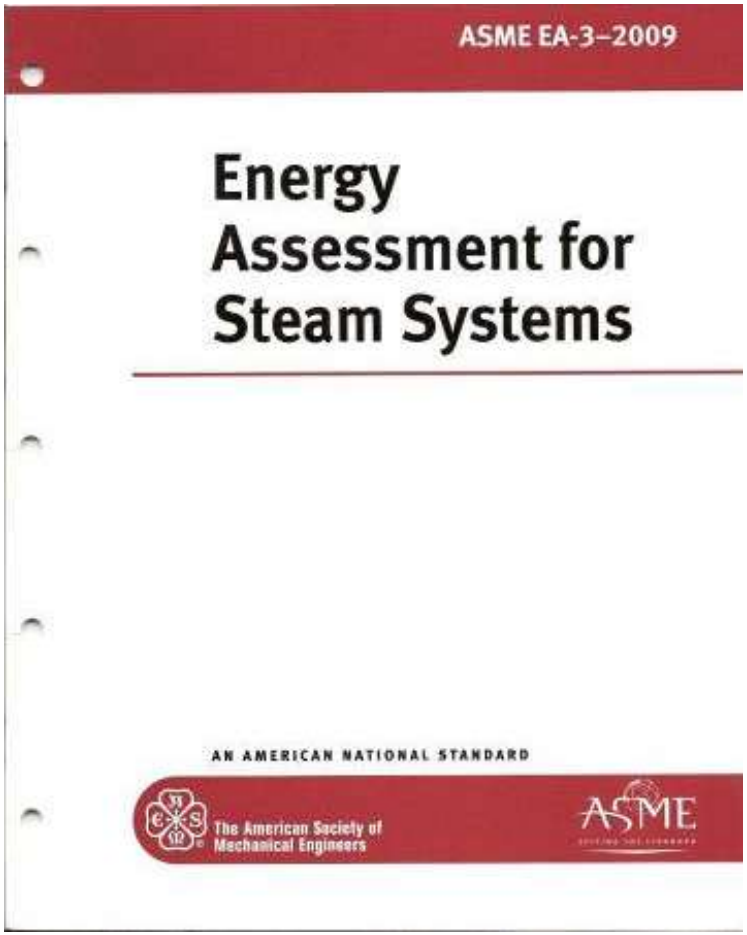

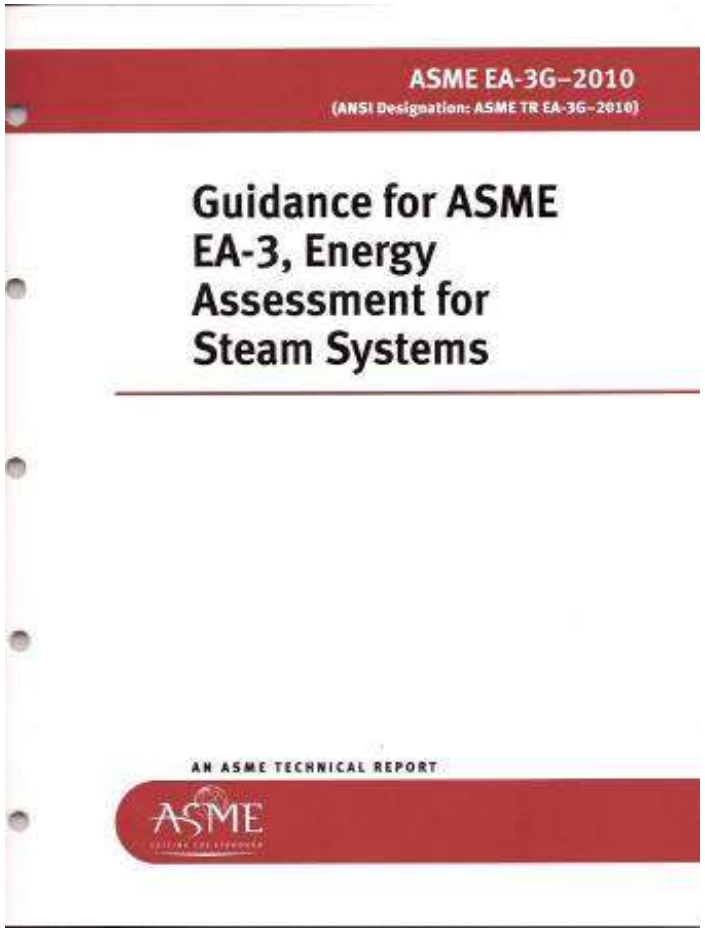

http://www.asme.org/products/codes---standards/energy-assessment-for-steam-systems

UNIDO 2012, all rights reserved

Energy Assessment Standard for Steam Systems

- Scope
  - Covers steam systems containing steam generator(s) or other steam source(s), a steam distribution network, end-use equipment and recovery
  - Cogeneration and power generation components may be included
  - Sets the requirements for conducting and reporting the results of a steam system energy assessment that considers the entire system, from energy inputs to the work performed as the result of these inputs
  - Resulting assessment will identify the major opportunities for improving the overall energy performance of steam system
  - Designed to be applied primarily at industrial facilities, but most of the specified procedures can be used in other facilities such as those in the institutional and commercial sectors

UNIDO 2012, all rights reserved

Energy Assessment Standard for Steam Systems

- Use of this Standard and accompanying Guidance Document should increase the quantity and quality of energy assessments performed, with significant potential savings in implemented energy costs

- **Intended for** energy managers, facility managers, plant engineers, energy consultants, maintenance managers, plant managers, EH&S managers, across a broad range of industries

UNIDO 2012, all rights reserved

Energy Assessment Standard for Steam Systems

- The standard clearly identifies the processes, protocols and deliverables of a steam assessment
- The sections of the steam assessment standard are:
  - Scope & Introduction
  - Definitions
  - References
  - Organizing the Assessment
  - Conducting the Assessment
  - Assessment Data Analysis
  - Report & Documentation
  - Appendix A – Key References
- An accompanying guide provides more detailed information for each of the sections

UNIDO 2012, all rights reserved

Typical Project Areas in a Steam System Assessment

- Boiler efficiency improvement
- Fuel switching
- Boiler blowdown thermal energy recovery
- Steam demand reduction
- General turbine operations
- Thermal integration
- Process/Utility integration
- Turbine-PRV operations
- Condensing turbine operations
- Thermal insulation
- Condensate recovery
- Flash steam recovery
- Steam leaks management
- Steam trap management
- Waste heat recovery

UNIDO 2012, all rights reserved

Energy Saving Opportunities

	Near-Term	Mid-Term	Long-Term
Definition	Improvements in operating and maintenance practices	Require purchase of additional equipment and/or changes	New technology or confirmation of performance in plant
Capital Expense	Low cost actions or equipment purchases	Rules of thumb estimates can be made	Additional due-dilligence required
Payback	Less than one year	One to to years	Two to five years
Examples of Projects	➢ Boiler combustion tuning ➢ Insulation ➢ Steam leaks and trap management	➢ Automatic combustion control ➢ Blowdown energy recovery ➢ Feedwater economizer	➢ Combined Heat & Power ➢ Steam turbine driven process components ➢ Boiler fuel switching

UNIDO 2012, all rights reserved

Industrial Steam System Energy Assessment – Student Exercise

UNIDO 2012, all rights reserved

Student Exercise Instructions

- You have been tasked to undertake a 3-day industrial steam system energy assessment at a chemicals manufacturing plant

- The plant utilities manager and an energy engineer are available to work with you all throughout the assessment and answer any system and process based questions that you may have

- Your goal – Identify and quantify major energy efficiency improvement opportunities at this plant

UNIDO 2012, all rights reserved

Student Exercise Instructions

- Define the approach that you would take to
  - Identify current BestPractices at the plant
  - Develop a list of priority actions to achieve energy efficiency improvement opportunities and determine areas that require system level analysis
  - Complete data collection
  - Undertake system level analysis for the opportunities that are identified
  - Develop summary report & present it to the plant
  - Future follow up and action items

UNIDO 2012, all rights reserved

Example Steam System

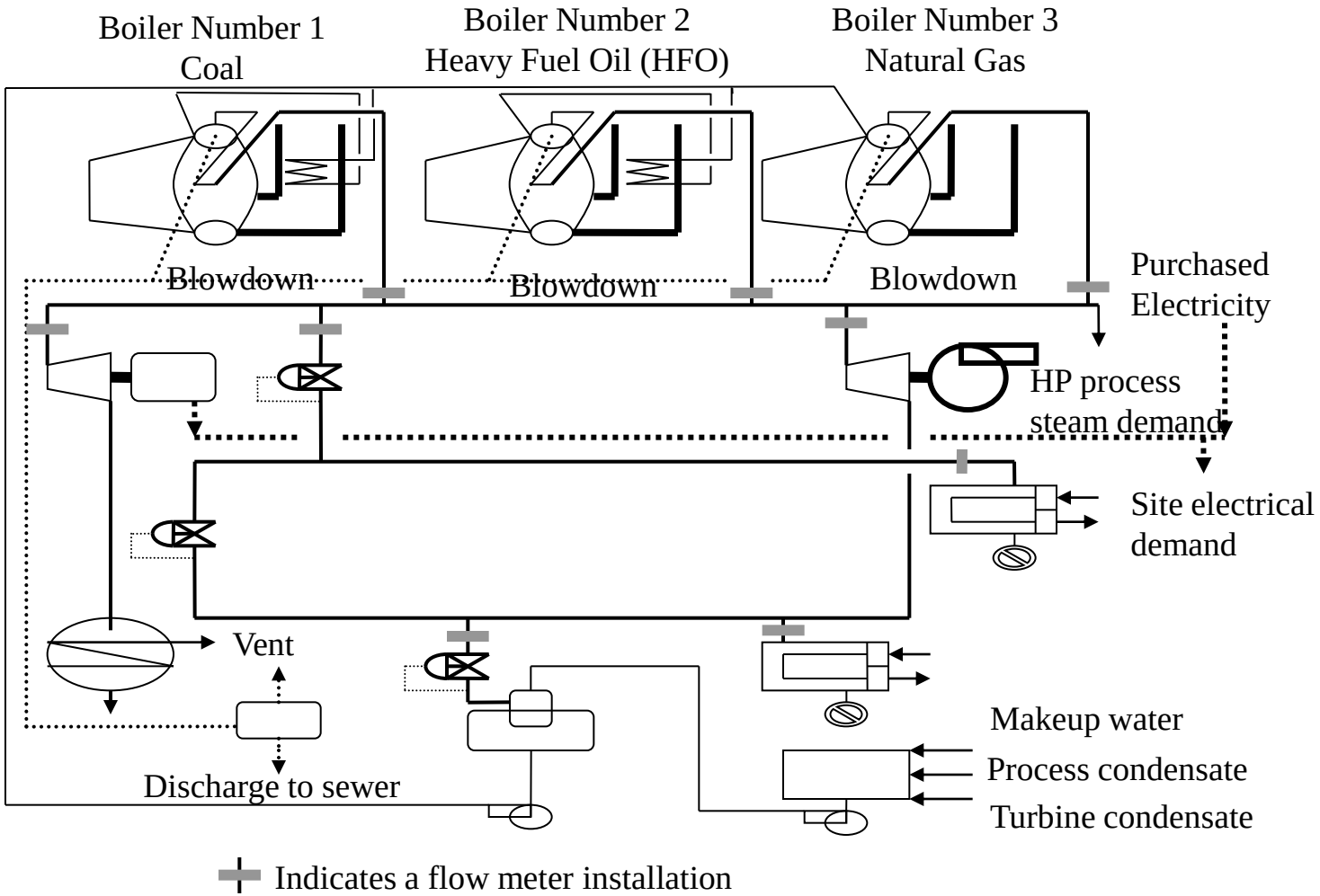

UNIDO 2012, all rights reserved

Student Exercise Steam System Information

- The plant (and steam system) operates 24 hours/day, 365 days/year;
- There are 3 boilers: two are coal-fired and one is methane gas-fired
- The coal-fired boilers are operated continuously and they take care of the steam demand
- The methane gas boiler is operated at minimum fire and serves as a standby boiler due to its fast response in case one of the coal-fired boiler trips
- Typical average loads correspond to ~70% of total available capacity
- Fireside heat transfer surfaces are normally found to be clean
- Waterside surfaces have had to be cleaned about every three years
- Feedwater economizers exist on the coal-fired boilers

UNIDO 2012, all rights reserved

Student Exercise Steam System Information

- Electricity is generated onsite and purchased from a local utility supplier
- Purchased electrical costs are ~$0.105/kWh
- Purchased electricity is typically 7 MW
- Methane gas is purchased under contract with a price of $0.75/Nm^3; Coal prices are ~$150/tonne
- The fuel properties contained in SSAT are appropriate to describe the fuels
- Makeup water is supplied to the facility with a cost of $0.75/m^3 and a temperature of 20°C

UNIDO 2012, all rights reserved

Student Exercise Steam System Information

- The boilers are field erected, water-tube type boilers
- The coal fired boilers were the original boilers for the site
- The methane gas fired boiler has been recently installed with the availability of pipeline methane gas
- Steam exported from the boilers is significantly superheated

UNIDO 2012, all rights reserved

Student Exercise Steam System Information

- Boiler water treatment data indicates all three boilers operate with similar water conditions
- The boilers operate continuously with a boiler water conductivity of ~2,500 µmho/cm
- Feedwater conductivity is ~125 µmho/cm
- Chlorides measurements of the boiler water typically indicates 280 ppm
- Feedwater chloride measurements indicate 14 ppm

UNIDO 2012, all rights reserved

Student Exercise Steam System Information

- The boiler is safety inspected annually by a boiler consultant who also verifies the operation of the combustion control equipment and measures efficiency
- There are no problems related to wet steam (corrosion, water hammer), the ability to maintain normal boiler water levels or the ability to maintain steam pressure to within 1.5 bars of the set-point
- Automatic boiler blowdown systems are installed but have not operated properly recently so blowdown has been adjusted manually based on once-a-day measurement of boiler water conductivity

UNIDO 2012, all rights reserved

Student Exercise Steam System Information

- High pressure steam is supplied to only one process unit
- This process unit utilizes steam in a direct contact process application
- This process steam demand is not equipped with a flow meter but the steam supply to this process is relatively constant
- Each of the boilers is equipped with a flow meter indicating steam production
- All the turbines receiving high-pressure steam are equipped with flow meters

UNIDO 2012, all rights reserved

Student Exercise Steam System Information

- Boiler operations and controls are as follows
  - **Boiler #1**
    - Flue gas temperature = 200°C
    - Flue gas oxygen = 5% (managed by positional controller)
  - **Boiler #2**
    - Flue gas temperature = 230°C
    - Flue gas oxygen = 7% (managed by positional controller)
  - **Boiler #3**
    - Flue gas temperature = 250°C
    - Flue gas oxygen = 4% (managed by automatic trim controller)

UNIDO 2012, all rights reserved

Student Exercise Steam System Information

- Combined boiler steam production - 160 Tph
  - Boiler #1 – 70 Tph (20 bars; 300°C)
  - Boiler #2 – 70 Tph (20 bars; 300°C)
  - Boiler #3 – 20 Tph (20 bars; 300°C)
- Medium pressure header – 10 bars
- Low pressure header – 2 bars
- HP-LP backpressure turbine steam flow – 103.8 Tph
- Condensing turbine steam flow - 15 Tph
- High pressure to medium pressure PRV flow – 35 Tph

UNIDO 2012, all rights reserved

Student Exercise Steam System Information

- Steam flow meters are in place on the medium-pressure and low-pressure steam headers
- These flow meters record the total steam flow to the process steam demands
- During normal operation steam supply to the medium pressure users is ~35 Tph
- Low pressure process steam demand is ~90 Tph
- It has been estimated that one half of the medium and one half of the low-pressure steam users are connected to the condensate collection system

UNIDO 2012, all rights reserved

Student Exercise Steam System Information

- The site is equipped with two steam turbines as noted on the system schematic
- HP-LP Backpressure Turbine
  - Connected to an electrical generator and which is rated to produce 5 MW of electric power
  - Manages the steam supply into the low-pressure header
  - Operates with a load between 65% and 80% of full load
  - Receives high pressure steam — boiler outlet conditions
  - Discharges steam with a temperature of 214°C and a pressure of 2 bars

UNIDO 2012, all rights reserved

Student Exercise Steam System Information

- Condensing Turbine Operations
  - The steam turbine is connected to an electrical generator
  - This component was installed with the original plant construction when two coal fired boilers served the site
  - Steam supply to the turbine is 15 Tph of high pressure steam — to produce 2.150 MW of electrical output
  - The condensing turbine operates with a condensing pressure of 0.15 bara
  - Generator efficiency is ~95%.

UNIDO 2012, all rights reserved

Student Exercise Steam System Information

- Pressure Reducing Stations
  - The steam system is equipped with two pressure reducing stations
  - One operates between the high pressure and the medium pressure systems
  - The other operates between the medium pressure and the low pressure systems
  - These pressure reducing stations are not equipped with desuperheating stations

UNIDO 2012, all rights reserved

Student Exercise Steam System Information

- Condensate Recovery System
  - The condensate recovery system is extensive
  - Recovered condensate is collected in many individual area condensate receivers
  - All of the receivers are vented to the atmosphere
  - A thorough steam trap survey was completed recently
  - There had not been a steam trap evaluation for a significant period of time prior to this
  - Maintenance activities have not been initiated in response to the steam trap survey at this point
  - The last significant maintenance activity associated with steam traps was four years ago

UNIDO 2012, all rights reserved

Student Exercise Steam System Information

- Steam Trap Survey Results

Steam Trap Survey				
System Pressure	**Traps Surveyed (Number of traps)**	**Good (# of traps)**	**Blocked or Low Temp (# of traps)**	**Leaking or Blowing (# of traps)**
High-Pressure	17	13	3	1
Medium-Pressure	265	207	26	32
Low-Pressure	1,971	1,726	108	137
Total	2,253	1,946	137	170

UNIDO 2012, all rights reserved

Student Exercise Steam System Information

- Other system information
  - The main condensate receiver for the facility is vented to the atmosphere
  - The vent piping presents a minor (negligible) amount of steam but this indicates the condensate entering the receiver is saturated liquid
  - Steam leaks appear to be well managed with only very minor (negligible) leaks observed
  - Insulation has been well maintained in the utilities area
  - Insulation on the steam distribution and end-use area may need investigation

UNIDO 2012, all rights reserved

Student Exercise Questions

- Steam System Scoping Tool
  - Complete the SSST sections related to “Steam System Operating Practices” and “Boiler Plant Operating Practices” based on the information provided
  - Also, indicate how you would proceed to obtain any additional information you would need beyond that provided
  - Finally, based on completion of these SSST sections, list the specific areas on which you would focus your attention to achieve boiler-related energy savings in the example plant

UNIDO 2012, all rights reserved

Student Exercise Questions

- Boiler #2 Efficiency Calculations
  - Estimate the fuel related operating cost of the boiler
    - Use only the largest boiler loss
    - The calculation should be completed using steam flow, steam conditions, and an estimate of boiler efficiency
  - Estimate the loss associated with boiler blowdown
  - Determine the direct and indirect boiler efficiencies
    - Assume shell loss is 0.4% of fuel input energy
    - Assume LOI is 2.1% provided by laboratory analysis
    - Assume a field evaluation has been completed and the average fuel flow rate is 165 tonne/day
    - The fuel higher heating value is 31,890 kJ/kg

UNIDO 2012, all rights reserved

Student Exercise Questions

- Boiler #2 Efficiency Calculations
  - Estimate the *impact* of installation of an automatic oxygen trim controller
    - The controller will reduce the flue gas oxygen content to 4.5% for the general boiler load
    - Assume a field evaluation has been completed and the average fuel flow rate is 165 tonne/day
    - The fuel higher heating value is 31,890 kJ/kg

UNIDO 2012, all rights reserved

Student Exercise Questions

- HP-LP Backpressure Turbine Efficiency Calculations
  - Determine the isentropic efficiency of the main steam turbine operating between the high pressure and low pressure systems

- Condensing Turbine Efficiency
  - Determine the isentropic efficiency of the condensing turbine based on the information provided

UNIDO 2012, all rights reserved

Student Exercise Questions

- Steam System Assessment Tool
  - Develop the SSAT model that best represents the general characteristics of the example facility for an evaluation that will provide representative marginal steam costs
  - This model should also provide a good description of the steam mass balance through the system
  - The analyses required for this exercise should be considered preliminary; as a result do not include boiler shell losses and LOI (Loss on Ignition)
  - Outputs for this exercise are marginal steam costs for the system and the steam flows through the pressure reducing valves

UNIDO 2012, all rights reserved

Student Exercise Questions

- Steam System Assessment Tool
  - Blowdown Energy Recovery
    - Using the SSAT model developed for the general steam system determine the economic impact of recovering thermal energy from boiler blowdown
    - Present the individual areas of economic impact contributing to the results

UNIDO 2012, all rights reserved

Student Exercise Questions

- Steam System Assessment Tool
  - Condensate Flash Steam Recovery
    - Using the SSAT model developed for the general steam system determine the economic impact of recovering flash steam produced from the existing condensate recovery system
    - Present the individual areas of economic impact contributing to the results

UNIDO 2012, all rights reserved

Student Exercise Questions

- Steam System Assessment Tool
  - Steam Demand
    - Process water was being unnecessarily heated from 40°C to 70°C with low-pressure steam
    - The steam trap serving the heat exchanger is functioning properly and is discharging saturated liquid
    - Steam entering the heat exchanger is from the low pressure system at saturated conditions—heat transfer losses in this branch line account for the energy loss from the superheated supply condition
    - The process water has a flow rate of ~400 l/min
    - Determine the steam system operational cost impact of eliminating this steam demand

UNIDO 2012, all rights reserved

Student Exercise Questions

- Steam System Assessment Tool
  - Steam Turbine versus Electric Motor
    - Determine the economic impact of replacing a 100 kW process drive electric motor with a steam turbine
    - Assume the process turbine will operate continuously between the high-pressure and medium-pressure systems
    - The turbine will have an isentropic efficiency of 35%

UNIDO 2012, all rights reserved

Student Exercise Questions

- Steam System Assessment Tool
  - 3E Plus Piping Insulation Problem
    - One of the process units is supplied medium-pressure steam through a 150 mm nominal diameter header
    - A 10 m long section of the header was observed to be un-insulated—the result of a past maintenance activity
    - The rest of the piping system is covered with a 50 mm thick calcium silicate insulation and aluminum jacket
    - Ambient conditions are typical for an industrial facility
    - The piping is located outside on a pipe bridge
    - Determine the energy loss reduction and economic impact associated with replacing the missing insulation

UNIDO 2012, all rights reserved

Student Exercise Questions

- Steam System Scoping Tool
  - Complete the SSST sections related to “Steam System Operating Practices” and “Boiler Plant Operating Practices” based on the information provided
  - Also, indicate how you would proceed to obtain any additional information you would need beyond that provided
  - Finally, based on completion of these SSST sections, list the specific areas on which you would focus your attention to achieve boiler-related energy savings in the example plant

UNIDO 2012, all rights reserved

Student Exercise Answers

- Steam System Scoping Tool

2. Steam System Operating Practices		
Steam Trap Maintenance		
ST1: Steam Trap Maintenance Practices	40	5
Water Treatment Program		
WT1: Water Treatment – Ensuring Function	10	0
WT2: Cleaning Boiler Fireside/Waterside Deposits	10	5
WT3: Measuring Boiler TDS, Top/Bottom Blowdown Rates	10	5
System Insulation		
IN1: Insulation – Boiler Plant	10	10
IN2: Insulation – Distribution/End Use/Recovery	20	0
Steam Leaks		
LK1: Steam Leaks – Severity	10	8
Water Hammer		
WH1: Water Hammer – How Often	10	10
Maintaining effective Steam System Operations		
MN1: Inspecting Important Steam Plant Equipment	20	5
Steam System Operating Practices Score	**140**	**48**

UNIDO 2012, all rights reserved

Student Exercise Answers

- Steam System Scoping Tool

3. Boiler Plant Operating Practices		
Boiler Efficiency		
BE1: Measuring Boiler Efficiency – How Often	10	5
BE2: Flue Gas Temperature, O2, CO Measurement	15	0
BE3: Controlling Boiler Excess Air	10	7
Heat Recovery Equipment		
HR1: Boiler Heat Recovery Equipment	15	7
Generating Dry Steam		
DS1: Checking Boiler Steam Quality	10	10
General Boiler Operation		
GB1: Automatic Boiler Blowdown Control	5	0
GB2: Frequency Of Boiler High/Low Level Alarms	10	10
GB3: Frequency Of Boiler Steam Pressure Fluctuations	5	5
Boiler Plant Operating Practices Score	**88**	**44**

UNIDO 2012, all rights reserved

Student Exercise Answers

- Steam System Scoping Tool
  - Potential List of Improvement Opportunities
    - Steam Trap Management Program
    - Insulation opportunities in the process areas
    - Boiler plant efficiency improvement
      - Monitoring and trending parameters
      - Implementing oxygen trim controllers
      - Feedwater economizer installation and operations
      - Blowdown control
      - Blowdown energy recovery
    - Condensate recovery
    - Turbines operation evaluation

UNIDO 2012, all rights reserved

Student Exercise Questions

- Boiler #2 Efficiency Calculations
  - Estimate the fuel related operating cost of the boiler
    - Use only the largest boiler loss
    - The calculation should be completed using steam flow, steam conditions, and an estimate of boiler efficiency
  - Estimate the loss associated with boiler blowdown
  - Determine the direct and indirect boiler efficiencies
    - Assume shell loss is 0.4% of fuel input energy
    - Assume LOI is 2.1% provided by laboratory analysis
    - Assume a field evaluation has been completed and the average fuel flow rate is 165 tonne/day
    - The fuel higher heating value is 31,890 kJ/kg

UNIDO 2012, all rights reserved

Student Exercise Answers

- Boiler #2 Efficiency Calculations
  - Fuel related operating cost

Input Data

Stack Gas Temperature (°F)	230 °C	Stack Temperature - Ambient Temperature = 210°C
Ambient Temperature (°F)	20 °C	

Stack Gas Oxygen Content (%)	7 %	

Note: Stack gas oxygen content is expressed on a molar or volumetric basis

Results

Estimated Stack Losses for each of the default fuels are as follows:

Natural Gas	**21.2 %**
Number 2 Fuel Oil	**16.8 %**
Number 6 Fuel Oil (Low Sulfur)	**16.3 %**
Number 6 Fuel Oil (High Sulfur)	**16.5 %**
Typical Eastern Coal (Bituminous)	**14.9 %**
Typical Western Coal (Subbituminous)	**16.5 %**
Typical Green Wood	**27.3 %**

UNIDO 2012, all rights reserved

Student Exercise Answers

- Boiler #2 Efficiency Calculations
  - Fuel related operating cost

$$\eta_{boiler} = \frac{Energy\ absorbed\ by\ steam}{Fuel\ input\ energy} \times 100$$

$$\eta_{boiler} = \frac{m_{steam}\left(h_{steam} - h_{feedwater}\right)}{m_{fuel}\ HHV_{fuel}} \times 100$$

- m_{steam} = 70,000 kg/hr
- H_{steam} = 3,020 kJ/kg (20 bars, 300°C – superheated)
- $h_{feedwater}$ = 463.1 kJ/kg (25 bars, 110°C or deaerator exit)

UNIDO 2012, all rights reserved

Student Exercise Answers

- Boiler #2 Efficiency Calculations
  - Fuel related operating cost

$$m_{fuel} = \frac{m_{steam}\left(h_{steam} - h_{feedwater}\right)}{\eta_{boiler} HHV_{fuel}} \times 100$$

$$m_{fuel} = \frac{70{,}000\left(3{,}020 - 463.1\right)}{\left(100 - 14.9\right) \times 31{,}890} \times 100$$

$$m_{fuel} = 6{,}595 \frac{kg}{hr}$$

UNIDO 2012, all rights reserved

Student Exercise Answers

- Boiler #2 Efficiency Calculations
  - Fuel related operating cost
    - Fuel consumption = 6.595 tonne/hr
    - Fuel cost = $150 per tonne
    - Fuel operating cost = 6.595 x 150 = $989.2 per hour
    - Fuel operating cost = 989.2 x 8,760 ~ **$8,665,000 per yr**

UNIDO 2012, all rights reserved

Student Exercise Answers

- Boiler #2 Efficiency Calculations
  - Loss associated with blowdown

$$\beta \approx \frac{Feedwater\ Conductivity}{Blowdown\ Conductivity} \times 100$$

$$\beta \approx \frac{125}{2{,}500} \times 100 = 5.0\%$$

$$m_{blowdown} = \left(\frac{\beta}{1-\beta}\right) m_{steam} = \left(\frac{0.05}{1-0.05}\right) 70{,}000 = 3{,}684 \text{ kg/hr} = 1.02 \text{ kg/s}$$

$$Q_{blowdown} = m_{blowdown}\left(h_{blowdown} - h_{feedwater}\right) = 1.02\left(920.1 - 463.1\right) = 466 \text{ kW}$$

$$Q_{blowdown} = m_{blowdown}\left(h_{blowdown} - h_{makeup}\right) = 1.02\left(920.1 - 83.9\right) = 853 \text{ kW}$$

Boiler System

UNIDO 2012, all rights reserved

Student Exercise Answers

- Boiler #2 Direct Efficiency Calculations
  - m_{steam} = 70,000 kg/hr
  - h_{steam} = 3,020 kJ/kg (20 bars, 300°C – superheated)
  - $h_{feedwater}$ = 463.1 kJ/kg (25 bars, 110°C or deaerator exit)
  - M_{fuel} = 165 tonnes per day
  - HHV_{fuel} = 31,890 kJ/kg

$$\eta_{boiler} = \frac{m_{steam}\left(h_{steam} - h_{feedwater}\right)}{m_{fuel}\, HHV_{fuel}} \times 100$$

$$\eta_{boiler} = \frac{70{,}000\left(3{,}020 - 463.1\right)}{165 \times 1000 \times 31{,}890} \times 24 \times 100$$

$$\eta_{boiler} = 81.9\%$$

UNIDO 2012, all rights reserved

Student Exercise Answers

- Boiler #2 InDirect Efficiency Calculations

$$\eta_{boiler} = 100 - Losses$$

$$\eta_{boiler} = 100 - \lambda_{shell} - \lambda_{blowdown} - \lambda_{stack} - \lambda_{other}$$

$$\lambda_{blowdown} = \frac{m_{blowdown}\left(h_{blowdown} - h_{feedwater}\right)}{m_{fuel}\ HHV_{fuel}} \times 100 = \frac{3{,}684\left(920.1 - 463.1\right)}{165 \times 1{,}000 \times 31{,}890} \times 24 \times 100 = 0.77\%$$

UNIDO 2012, all rights reserved

Student Exercise Answers

- Boiler #2 InDirect Efficiency Calculations

$$\eta_{boiler} = 100 - Losses$$

$$\eta_{boiler} = 100 - \lambda_{shell} - \lambda_{blowdown} - \lambda_{stack} - \lambda_{other}$$

$$\eta_{boiler} = 100 - 0.4 - 0.77 - 14.9 - 2.1$$

$$\eta_{boiler} = 81.8\%$$

UNIDO 2012, all rights reserved

Student Exercise Questions

- Boiler #2 Efficiency Calculations
  - Estimate the *impact* of installation of an automatic oxygen trim controller
    - The controller will reduce the flue gas oxygen content to 4.5% for the general boiler load
    - Assume a field evaluation has been completed and the average fuel flow rate is 165 tonne/day
    - The fuel higher heating value is 31,890 kJ/kg

UNIDO 2012, all rights reserved

Student Exercise Answers

Typical Flue Gas Oxygen Content Control Parameters								
Fuel	Automatic Control Flue Gas O_2 Content		Positioning Control Flue Gas O_2 Content		Automatic Control Excess Air		Positioning Control Excess Air	
	Min. [%]	Max. [%]	Min. [%]	Max. [%]	Min. [%]	Max. [%]	Min. [%]	Max. [%]
Natural Gas	1.5	3.0	3.0	7.0	9	18	18	55
Numb. 2 Fuel Oil	2.0	3.0	3.0	7.0	11	18	18	55
Numb. 6 Fuel Oil	2.5	3.5	3.5	8.0	14	21	21	65
Pulverized Coal	2.5	4.0	4.0	7.0	14	25	25	50
Stoker Coal	3.5	5.0	5.0	8.0	20	32	32	65

Source: US DOE ITP Steam BestPractices Program

UNIDO 2012, all rights reserved

Install Automatic Oxygen Trim Controller

Input Data

Stack Gas Temperature (°F)	230 °C	Stack T
Ambient Temperature (°F)	20 °C	

Stack Gas Oxygen Content (%)	7 %	

Note: Stack gas oxygen content is expressed on a molar or volumetric basis

Estimated Stack Losses for each of the default fuels are as follows:

Natural Gas	**21.2 %**
Number 2 Fuel Oil	**16.8 %**
Number 6 Fuel Oil (Low Sulfur)	**16.3 %**
Number 6 Fuel Oil (High Sulfur)	**16.5 %**
Typical Eastern Coal (Bituminous)	**14.9 %**
Typical Western Coal (Subbituminous)	**16.5 %**
Typical Green Wood	**27.3 %**

$$\eta_{boiler} = 100 - 14.9$$

$$\eta_{boiler} = 85.1\%$$

Input Data

Stack Gas Temperature (°F)	230 °C	Stack T
Ambient Temperature (°F)	20 °C	

Stack Gas Oxygen Content (%)	4.5 %	

Note: Stack gas oxygen content is expressed on a molar or volumetric basis

Estimated Stack Losses for each of the default fuels are as follows:

Natural Gas	**19.5 %**
Number 2 Fuel Oil	**15.1 %**
Number 6 Fuel Oil (Low Sulfur)	**14.6 %**
Number 6 Fuel Oil (High Sulfur)	**14.9 %**
Typical Eastern Coal (Bituminous)	**13.2 %**
Typical Western Coal (Subbituminous)	**14.8 %**
Typical Green Wood	**25.8 %**

$$\eta_{boiler} = 100 - 13.2$$

$$\eta_{boiler} = 86.8\%$$

UNIDO 2012, all rights reserved

Student Exercise Answers

- Boiler #2 – Impact of installing an automatic oxygen trim controller

$$Savings = \left(1 - \frac{\eta_{base}}{\eta_{new}}\right) \times K_{boiler}$$

$$Savings = \left(1 - \frac{85.1}{86.8}\right) \times 8{,}665{,}000$$

$$Savings \approx \$170{,}000 / yr$$

UNIDO 2012, all rights reserved

Student Exercise Questions

- HP-LP Backpressure Turbine Efficiency Calculations
  - Determine the isentropic efficiency of the main steam turbine operating between the high pressure and low pressure systems

- Condensing Turbine Efficiency
  - Determine the isentropic efficiency of the condensing turbine based on the information provided

UNIDO 2012, all rights reserved

Student Exercise Answers

- HP-LP Backpressure Turbine Efficiency Calculations

Actual Operating Conditions

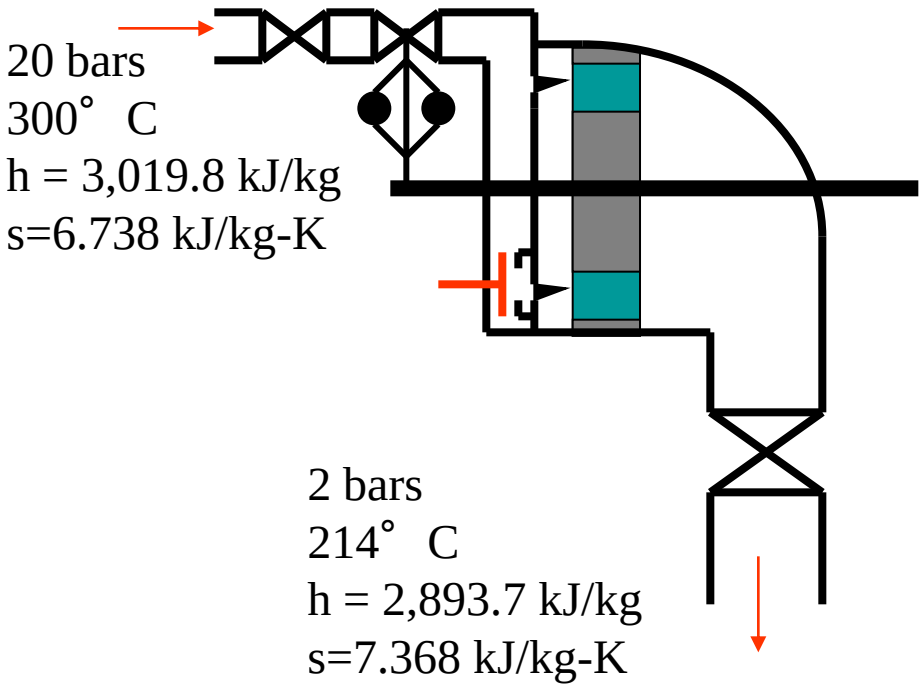

UNIDO 2012, all rights reserved

Student Exercise Answers

- HP-LP Backpressure Turbine Efficiency Calculations

Isentropic Conditions

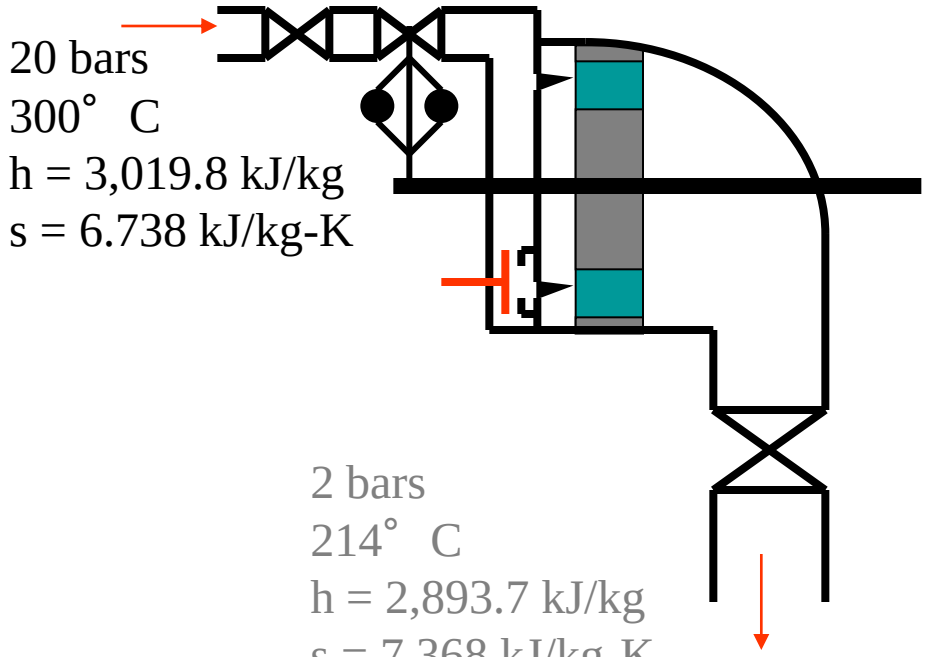

UNIDO 2012, all rights reserved

Student Exercise Answers

- HP-LP Backpressure Turbine Efficiency Calculations

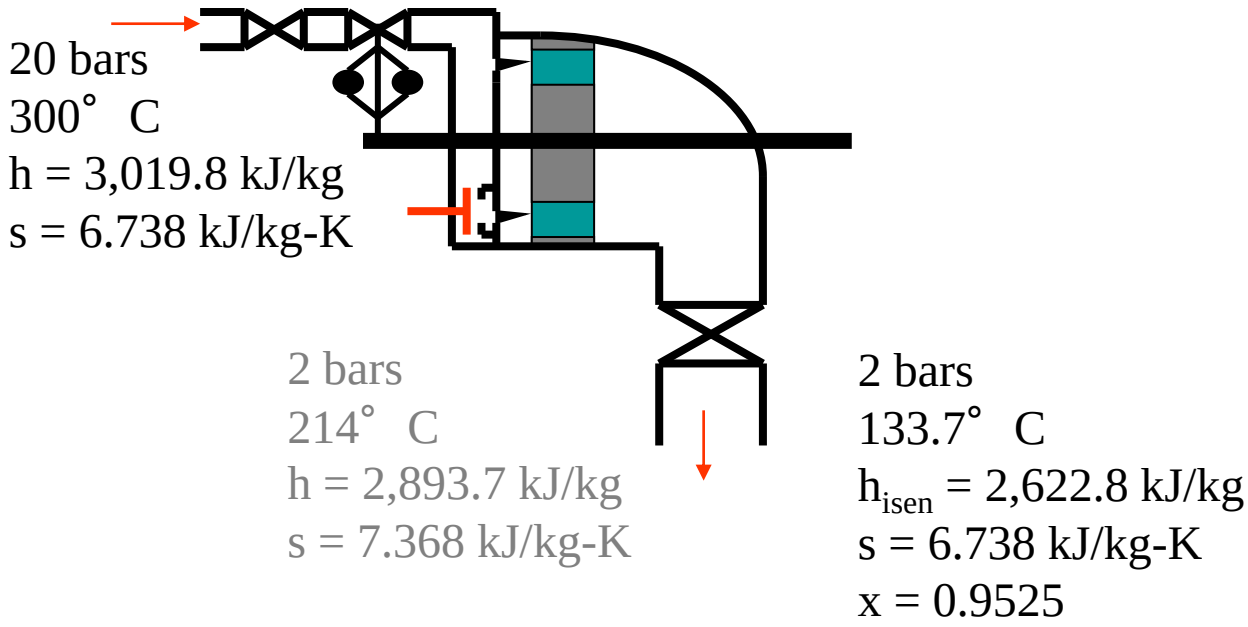

$$\eta_{isentropic} = \frac{(h_{inlet} - h_{exit})_{actual}}{(h_{inlet} - h_{exit})_{isentropic}} = \frac{(3{,}019.8 - 2{,}893.7)}{(3{,}019.8 - 2{,}622.8)} = \frac{126.1}{397.0} = 0.3176$$

UNIDO 2012, all rights reserved

Student Exercise Answers

- Condensing Turbine Efficiency Calculations

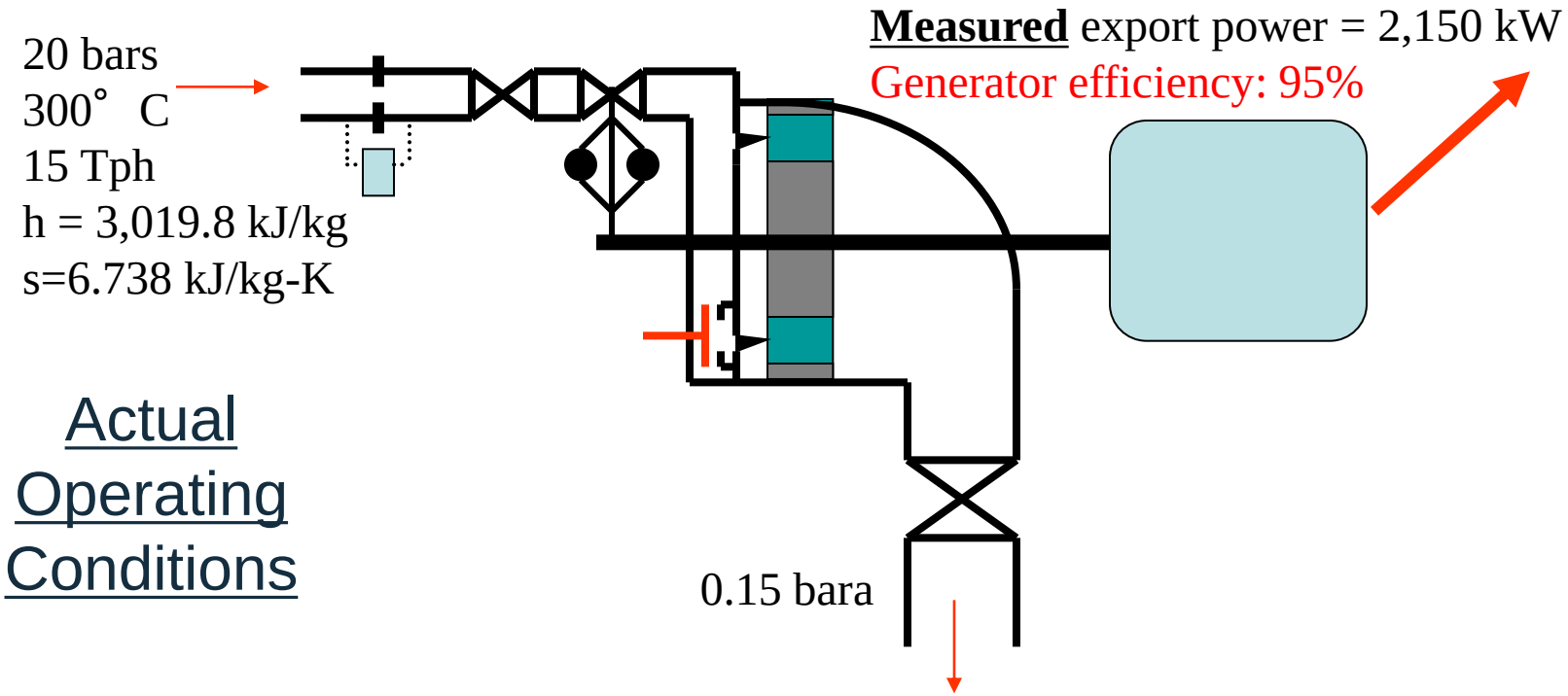

Actual Operating Conditions

UNIDO 2012, all rights reserved

Student Exercise Answers

- Condensing Turbine Efficiency Calculations

20 bars
300° C
15 Tph
h = 3,019.8 kJ/kg
s = 6.738 kJ/kg-K

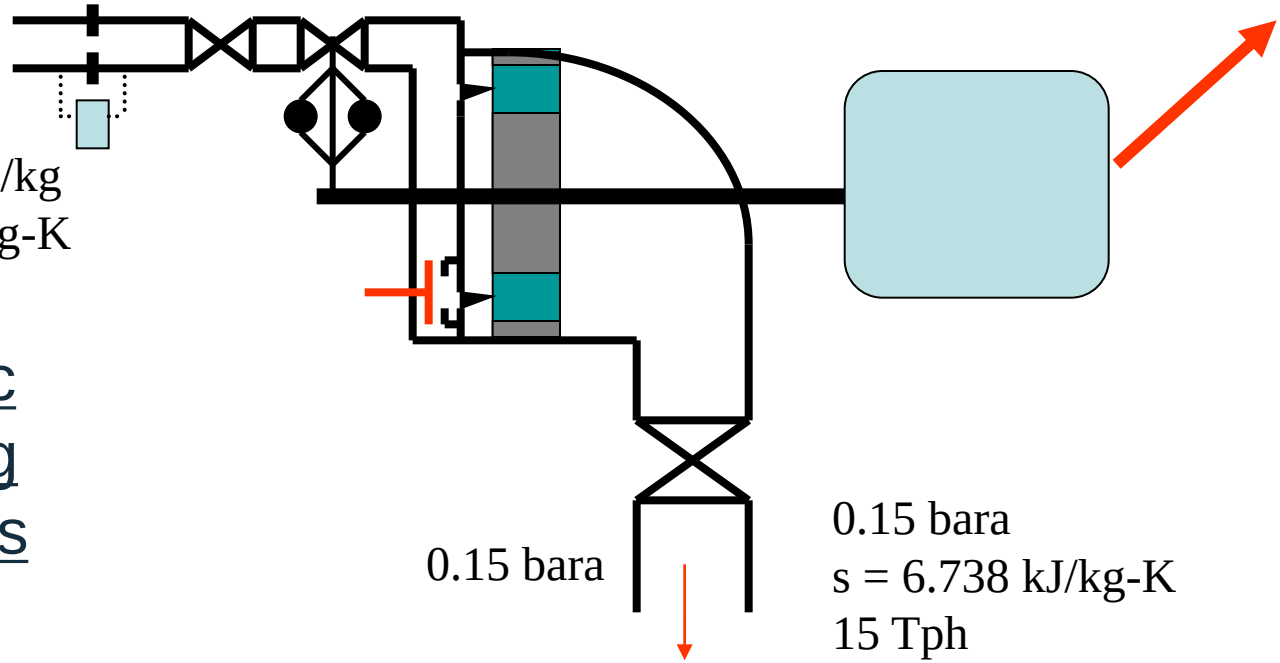

Isentropic Operating Conditions

0.15 bara

0.15 bara
s = 6.738 kJ/kg-K
15 Tph
$h_{isentropic}$ = 2,183.2 kJ/kg
$T_{isentropic}$ = 54° C
Quality = 0.825

UNIDO 2012, all rights reserved

Student Exercise Answers

- Condensing Turbine Efficiency Calculations

$$\dot{W}_{generator} = 2{,}150\ kW$$

$$\eta_{generator} = \frac{Generator\ Work}{Turbine\ Shaft\ Work} = \frac{\dot{W}_{generator}}{\dot{W}_{turbine}} = \frac{2{,}150\ kW}{\dot{W}_{turbine}} = 0.95$$

$$\dot{W}_{turbine} = 2{,}263\ kW$$

$$\eta_{isentropic} = \frac{Actual\ Turbine\ Work}{Isentropic\ Work} = \frac{\dot{W}_{generator}}{\eta_{generator}\dot{W}_{isen}} = \frac{\dot{W}_{gen}}{\eta_{gen}\dot{m}_{st}\left(h_i - h_e\right)_{isen}}$$

UNIDO 2012, all rights reserved

Student Exercise Answers

20 bars
300° C
15 Tph
h = 3,019.8 kJ/kg
s = 6.738 kJ/kg-K

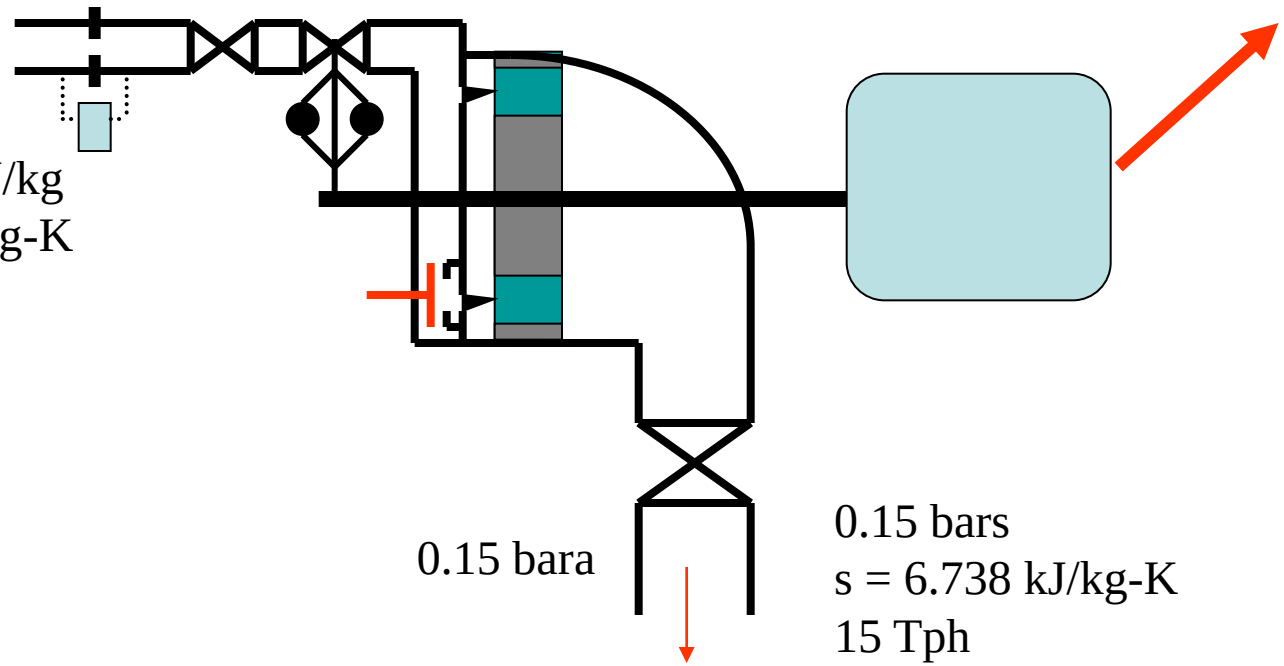

0.15 bara

0.15 bars
s = 6.738 kJ/kg-K
15 Tph
$h_{isentropic}$ = 2,183.2 kJ/kg
$T_{isentropic}$ = 54° C
Quality = 0.825

$$\eta_{isentropic} = \frac{2{,}150\ kW}{0.95}\ \frac{3{,}600\ \frac{s}{hr}}{15{,}000\ \frac{kg}{hr}}\ \frac{1}{\left(3{,}019.8\ \frac{kJ}{kg} - 2{,}183.2\ \frac{kJ}{kg}\right)} = 0.65$$

UNIDO 2012, all rights reserved

Student Exercise Questions

- Steam System Assessment Tool
  - Develop the SSAT model that best represents the general characteristics of the example facility for an evaluation that will provide representative marginal steam costs
  - This model should also provide a good description of the steam mass balance through the system
  - The analyses required for this exercise should be considered preliminary; as a result do not include boiler shell losses and LOI
  - Outputs for this exercise are marginal steam costs for the system and the steam flows through the pressure reducing valves

UNIDO 2012, all rights reserved

Student Exercise Answers

Steam System Assessment Tool

SSAT 3 Header Students Example

Current Operation

Emissions	t/y
CO2	368484
SO2	2677
NOx	1029

Model Status : OK

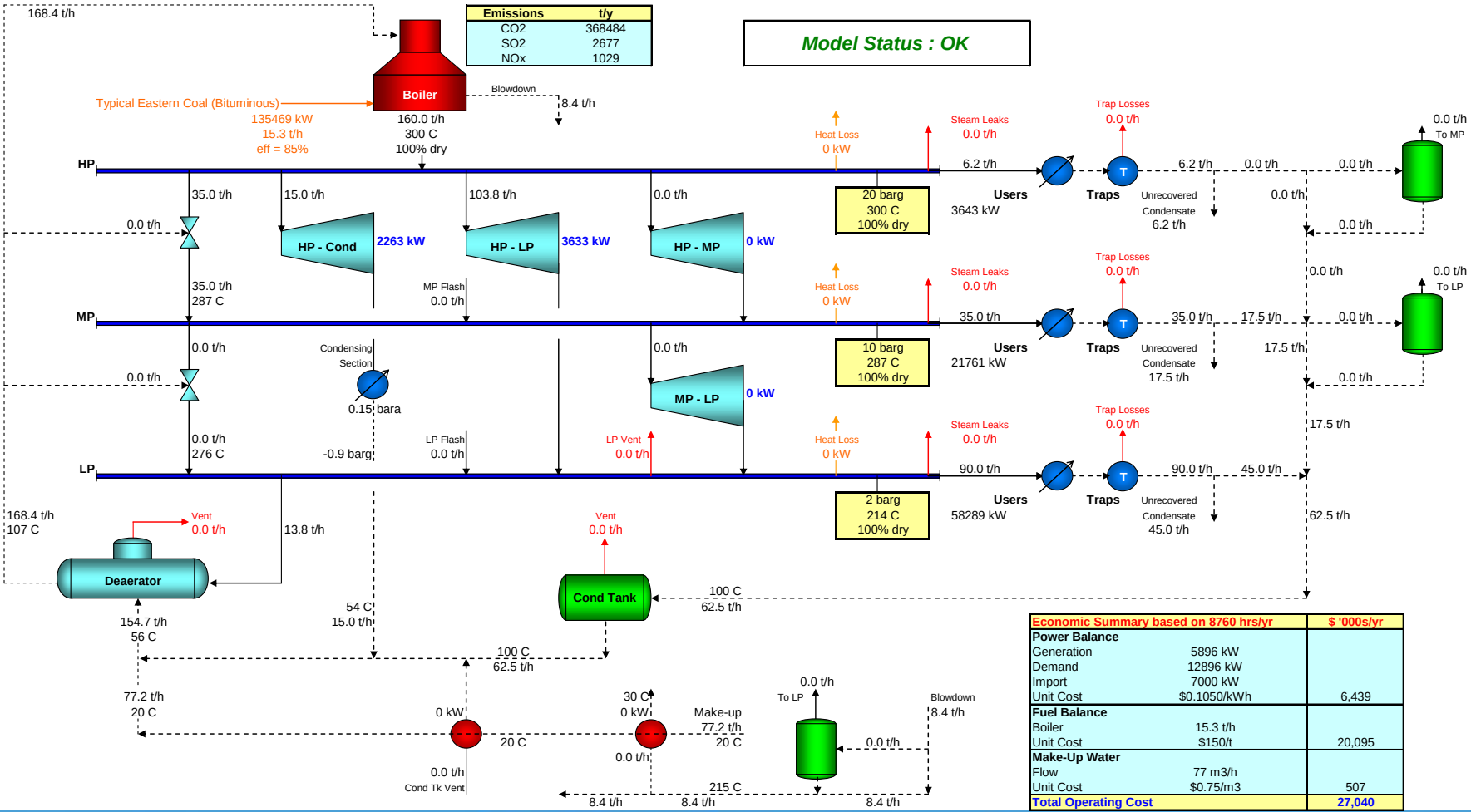

Economic Summary based on 8760 hrs/yr		$ '000s/yr
Power Balance		
Generation	5896 kW	
Demand	12896 kW	
Import	7000 kW	
Unit Cost	$0.1050/kWh	6,439
Fuel Balance		
Boiler	15.3 t/h	
Unit Cost	$150/t	20,095
Make-Up Water		
Flow	77 m3/h	
Unit Cost	$0.75/m3	507
Total Operating Cost		**27,040**

UNIDO 2012, all rights reserved

Student Exercise Answers

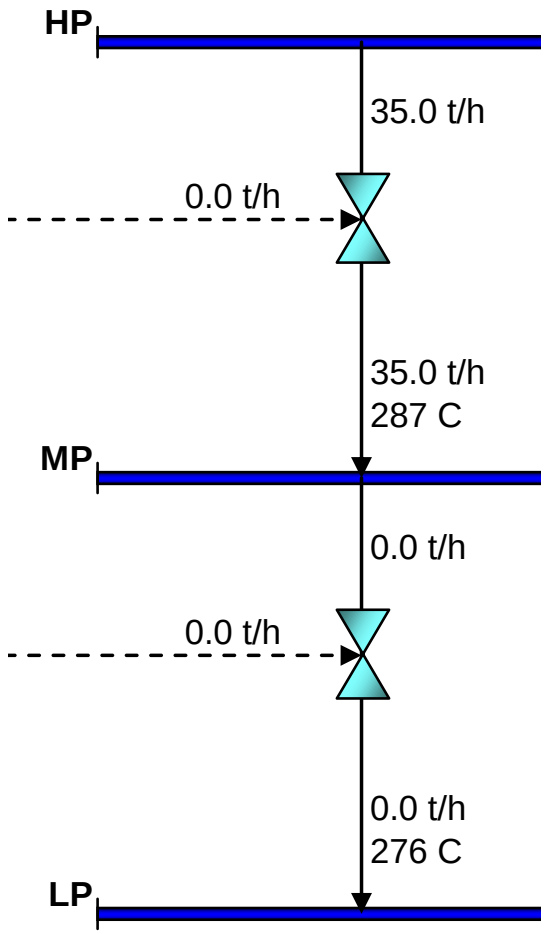

Marginal Steam Costs	
(based on current operation)	
HP ($/t)	17.28
MP ($/t)	15.72
LP ($/t)	12.04

UNIDO 2012, all rights reserved

Student Exercise Questions

- Steam System Assessment Tool
  - Blowdown Energy Recovery
    - Using the SSAT model developed for the general steam system determine the economic impact of recovering thermal energy from boiler blowdown
    - Present the individual areas of economic impact contributing to the results

UNIDO 2012, all rights reserved

Student Exercise Answers

- Steam System Assessment Tool
  - Blowdown Energy Recovery
    - Current Operating Conditions

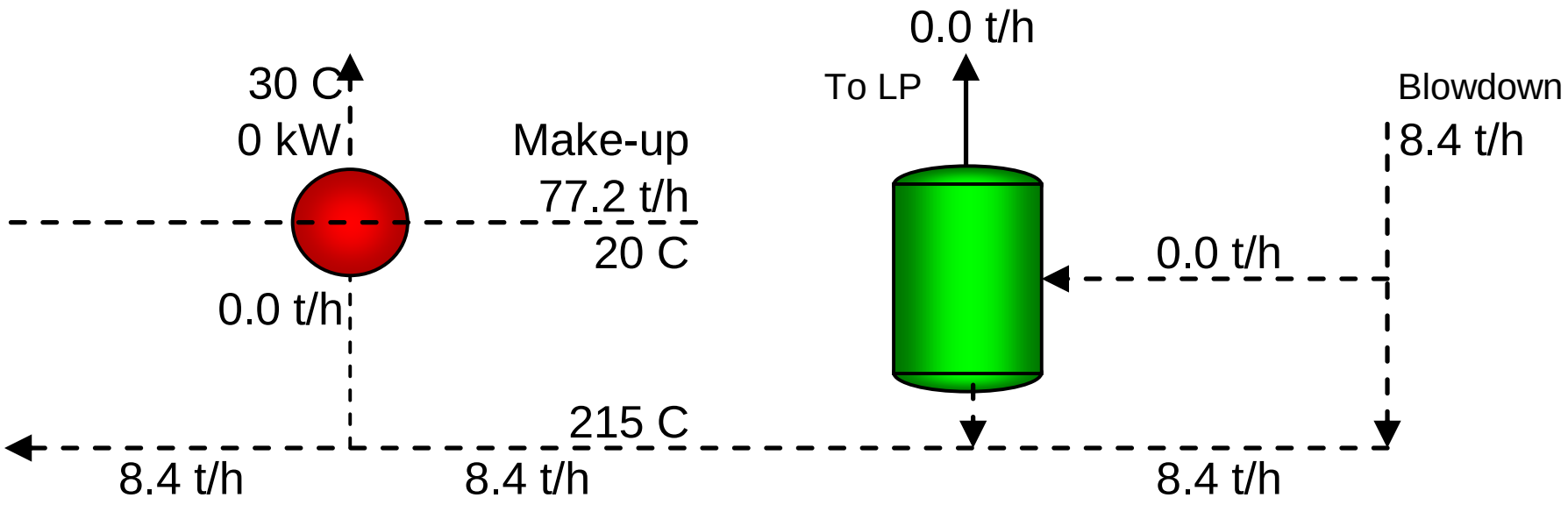

UNIDO 2012, all rights reserved

Student Exercise Answers

- Steam System Assessment Tool
  - Blowdown Energy Recovery
    - Projects (5 & 12) Model Conditions

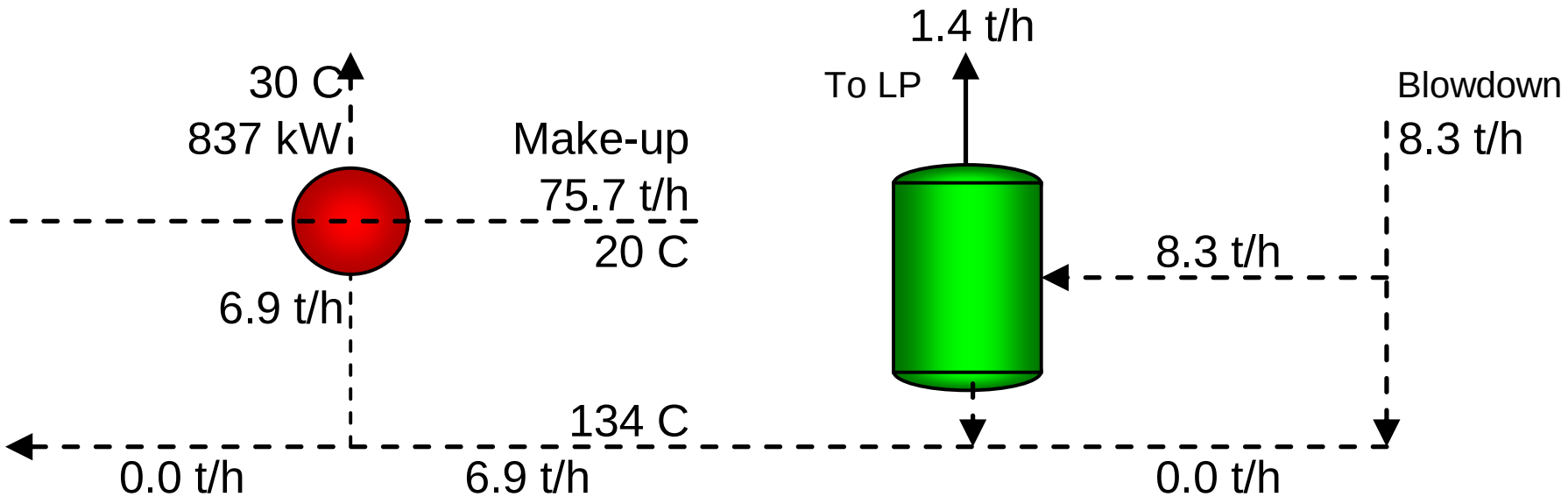

UNIDO 2012, all rights reserved

Student Exercise Answers

- Steam System Assessment Tool
  - Blowdown Energy Recovery
    - Results

Model Status : OK

Cost Summary ($ '000s/yr)	Current Operation	After Projects	Reduction	
Power Cost	6,439	6,526	-88	-1.4%
Fuel Cost	20,095	19,753	342	1.7%
Make-Up Water Cost	507	497	10	1.9%
Total Cost (in $ '000s/yr)	**27,040**	**26,776**	**264**	**1.0%**

On-Site Emissions	Current Operation	After Projects	Reduction	
CO2 Emissions	368484 t/yr	362210 t/yr	6274 t/yr	1.7%
SOx Emissions	2677 t/yr	2631 t/yr	46 t/yr	1.7%
NOx Emissions	1029 t/yr	1011 t/yr	18 t/yr	1.7%

Power Station Emissions	Reduction After Projects	Total Reduction	
CO2 Emissions	-595 t/yr	5679 t/yr	-
SOx Emissions	-2 t/yr	44 t/yr	-
NOx Emissions	-1 t/yr	16 t/yr	-

Note - Calculates the impact of the change in site power import on emissions from an external power station. Total reduction values are for site + power station

UNIDO 2012, all rights reserved

Student Exercise Answers

- Steam System Assessment Tool
  - Blowdown Energy Recovery
    - HP-LP Turbine comparison

Current Operations

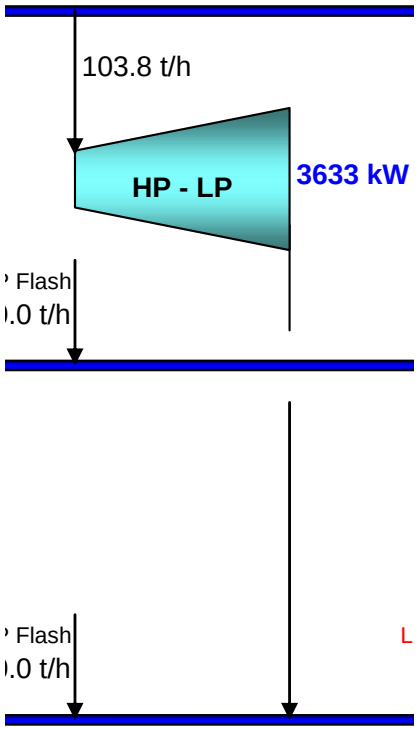

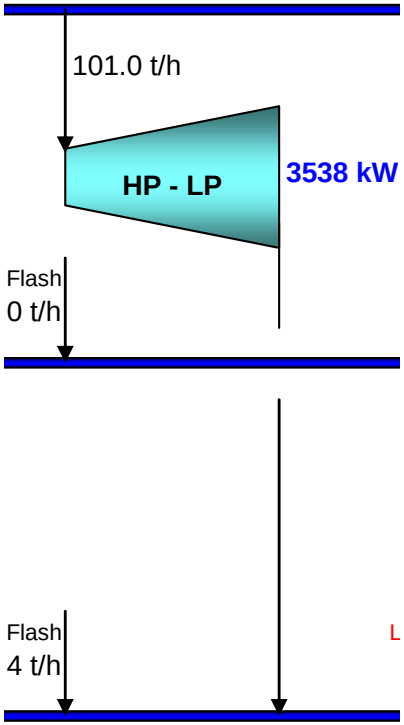

Projects (5 & 12) Operations

UNIDO 2012, all rights reserved

Student Exercise Questions

- Steam System Assessment Tool
  - Condensate Flash Steam Recovery
    - Using the SSAT model developed for the general steam system determine the economic impact of recovering flash steam produced from the existing condensate recovery system
    - Present the individual areas of economic impact contributing to the results

UNIDO 2012, all rights reserved

Student Exercise Answers

- Steam System Assessment Tool
  - Condensate Flash Steam Recovery

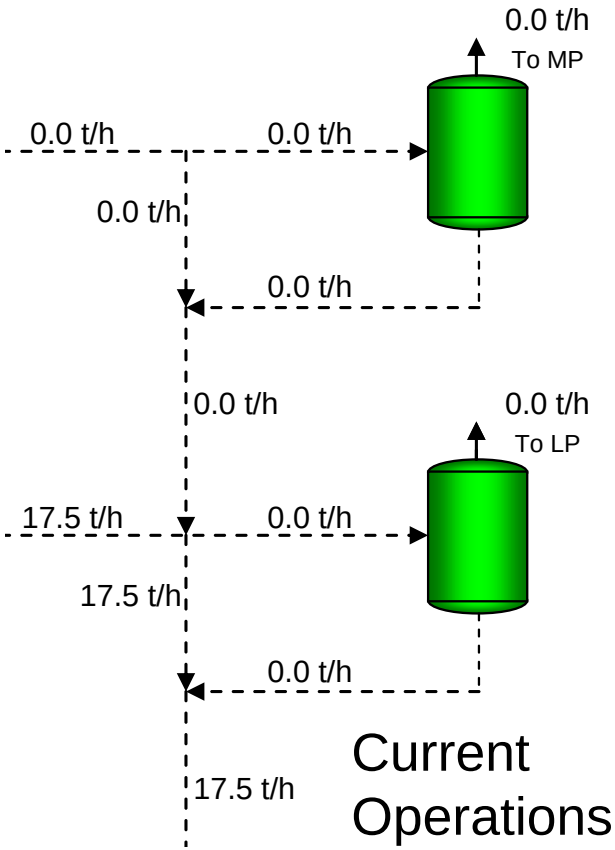

Current Operations

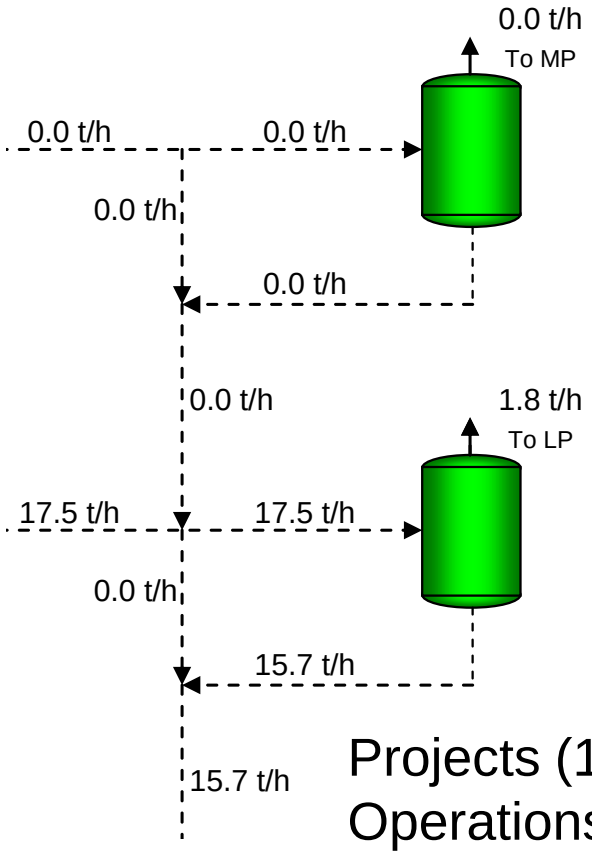

Projects (14 & 15) Operations

UNIDO 2012, all rights reserved

Student Exercise Answers

- Steam System Assessment Tool
  - Condensate Flash Steam Recovery
    - Results

Model Status : OK

Cost Summary ($ '000s/yr)	Current Operation	After Projects	Reduction	
Power Cost	6,439	6,493	-54	-0.8%
Fuel Cost	20,095	19,884	210	1.0%
Make-Up Water Cost	507	507	0	0.0%
Total Cost (in $ '000s/yr)	**27,040**	**26,884**	**157**	**0.6%**

On-Site Emissions	Current Operation	After Projects	Reduction	
CO2 Emissions	368484 t/yr	364628 t/yr	3856 t/yr	1.0%
SOx Emissions	2677 t/yr	2649 t/yr	28 t/yr	1.0%
NOx Emissions	1029 t/yr	1018 t/yr	11 t/yr	1.0%

Power Station Emissions	Reduction After Projects	Total Reduction	
CO2 Emissions	-366 t/yr	3490 t/yr	-
SOx Emissions	-1 t/yr	27 t/yr	-
NOx Emissions	-1 t/yr	10 t/yr	-

Note - Calculates the impact of the change in site power import on emissions from an external power station. Total reduction values are for site + power station

UNIDO 2012, all rights reserved

Student Exercise Questions

- Steam System Assessment Tool
  - Steam Demand
    - Process water was being unnecessarily heated from 40°C to 70°C with low-pressure steam
    - The steam trap serving the heat exchanger is functioning properly and is discharging saturated liquid
    - Steam entering the heat exchanger is from the low pressure system at the LP header conditions—heat transfer losses in this branch line can be neglected
    - The process water has a flow rate of ~400 l/min
    - Determine the steam system operational cost impact of eliminating this steam demand

UNIDO 2012, all rights reserved

Student Exercise Answers

Water flow:
400 L/min

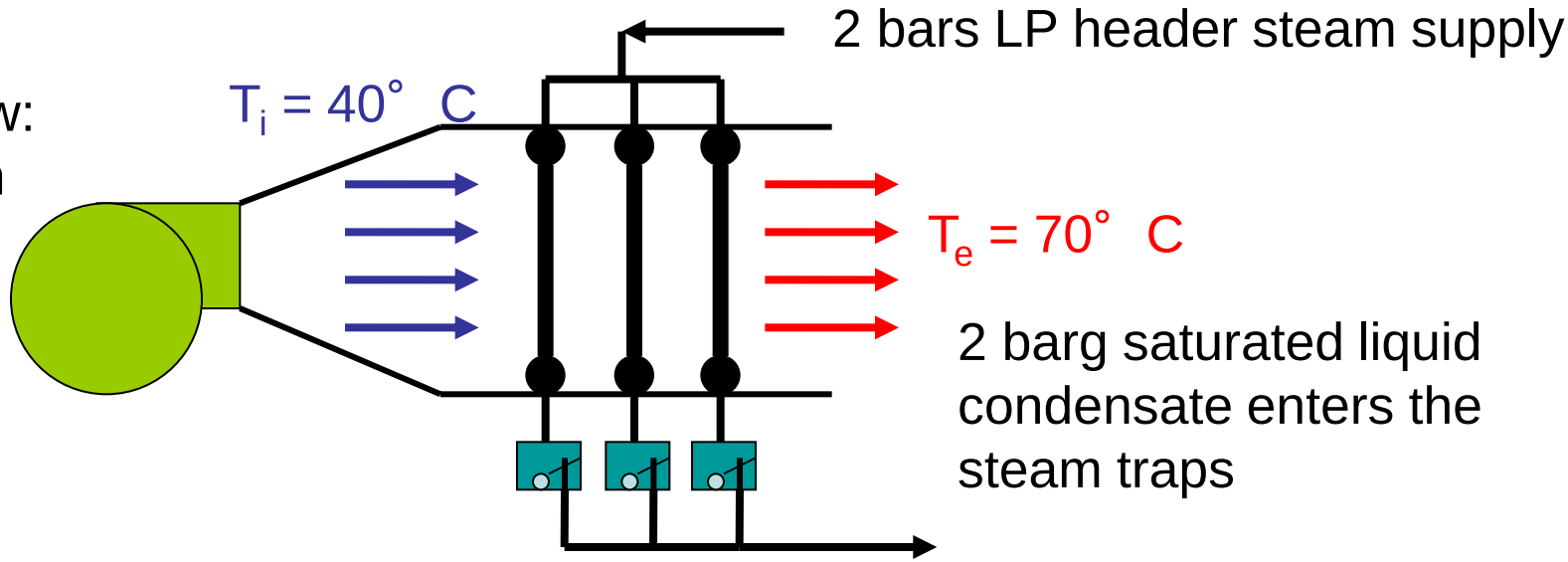

$$Q_{water} = m_{water} C_{p_water} \left(T_{out} - T_{in}\right)_{water}$$

$$Q_{water} = \frac{400}{1{,}000} \times 992.2 \times 4.182 \times (70 - 40) \times \frac{1}{60}$$

$$Q_{water} = 829.8\, kW$$

UNIDO 2012, all rights reserved

Student Exercise Answers

- Energy Savings = 829.8 kW

$$m_{steamsaved} = \frac{EnergySavings}{\left(h_{steam} - h_{condensate}\right)}$$

$$m_{steamsaved} = \frac{829.8}{\left(2{,}894 - 561.5\right)} \times 3{,}600$$

$$m_{steamsaved} = 1{,}281 \frac{kg}{\text{hr}}$$

- Steam saved = 1.281 * 8,760 = 11,222 tonnes/yr
- Unit cost of steam generation: $12.04 per tonne
- Annual cost savings ~ $135,000
- An identical analysis can be done using Project 1 – Steam Demand Savings in SSAT

UNIDO 2012, all rights reserved

Student Exercise Answers

- Steam Demand Savings
  - Results

Model Status : OK

Cost Summary ($ '000s/yr)	Current Operation	After Projects	Reduction	
Power Cost	6,439	6,484	-45	-0.7%
Fuel Cost	20,095	19,919	175	0.9%
Make-Up Water Cost	507	502	5	0.9%
Total Cost (in $ '000s/yr)	**27,040**	**26,905**	**135**	**0.5%**

On-Site Emissions	Current Operation	After Projects	Reduction	
CO2 Emissions	368484 t/yr	365268 t/yr	3216 t/yr	0.9%
SOx Emissions	2677 t/yr	2653 t/yr	23 t/yr	0.9%
NOx Emissions	1029 t/yr	1020 t/yr	9 t/yr	0.9%

Power Station Emissions	Reduction After Projects	Total Reduction	
CO2 Emissions	-305 t/yr	2911 t/yr	-
SOx Emissions	-1 t/yr	22 t/yr	-
NOx Emissions	-1 t/yr	8 t/yr	-

Note - Calculates the impact of the change in site power import on emissions from an external power station. Total reduction values are for site + power station

UNIDO 2012, all rights reserved

Student Exercise Questions

- Steam System Assessment Tool
  - Steam Turbine versus Electric Motor
    - Determine the economic impact of replacing a 100 kW process drive electric motor with a steam turbine
    - Assume the process turbine will operate continuously between the high-pressure and medium-pressure systems
    - The turbine will have an isentropic efficiency of 35%

UNIDO 2012, all rights reserved

Student Exercise Answers

- Steam System Assessment Tool
  - Steam Turbine versus Electric Motor
    - Current operating conditions

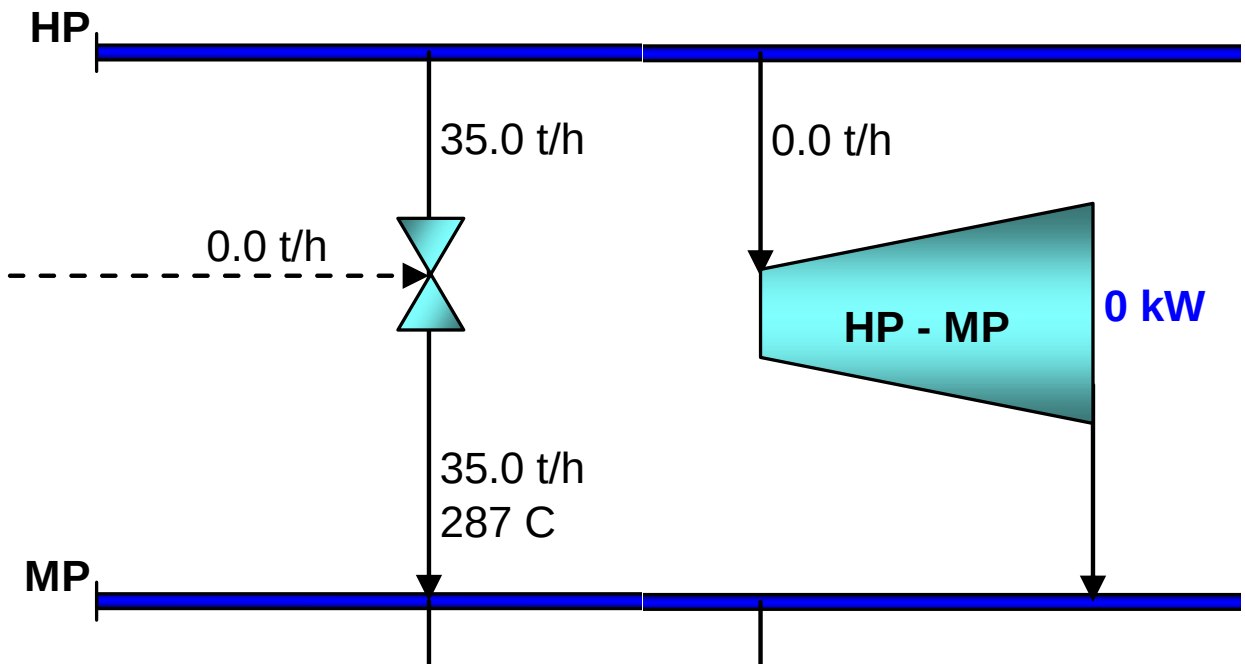

UNIDO 2012, all rights reserved

Student Exercise Answers

- Steam System Assessment Tool
  - Steam Turbine versus Electric Motor
    - Projects operating conditions

Project 8 - HP to MP Steam Turbine(s) Not installed		
Do you wish to add an HP to MP turbine?		Yes, install a new turbine
→ If yes, select the appropriate turbine operating mode		Option 2 - Fixed operation ←
→ Specify a new isentropic efficiency (%)	35 %	←
Note: A generator electrical efficiency of 100% is assumed by the model		
→ **Option 2** - How do wish to define the fixed turbine operation?		Specify fixed power generation ←
Option 2 - Fixed steam flow	50 t/h	
→ **Option 2** - Fixed power generation	100 kW	←

UNIDO 2012, all rights reserved

Student Exercise Answers

- Steam System Assessment Tool
  - Steam Turbine versus Electric Motor
    - Projects operating conditions

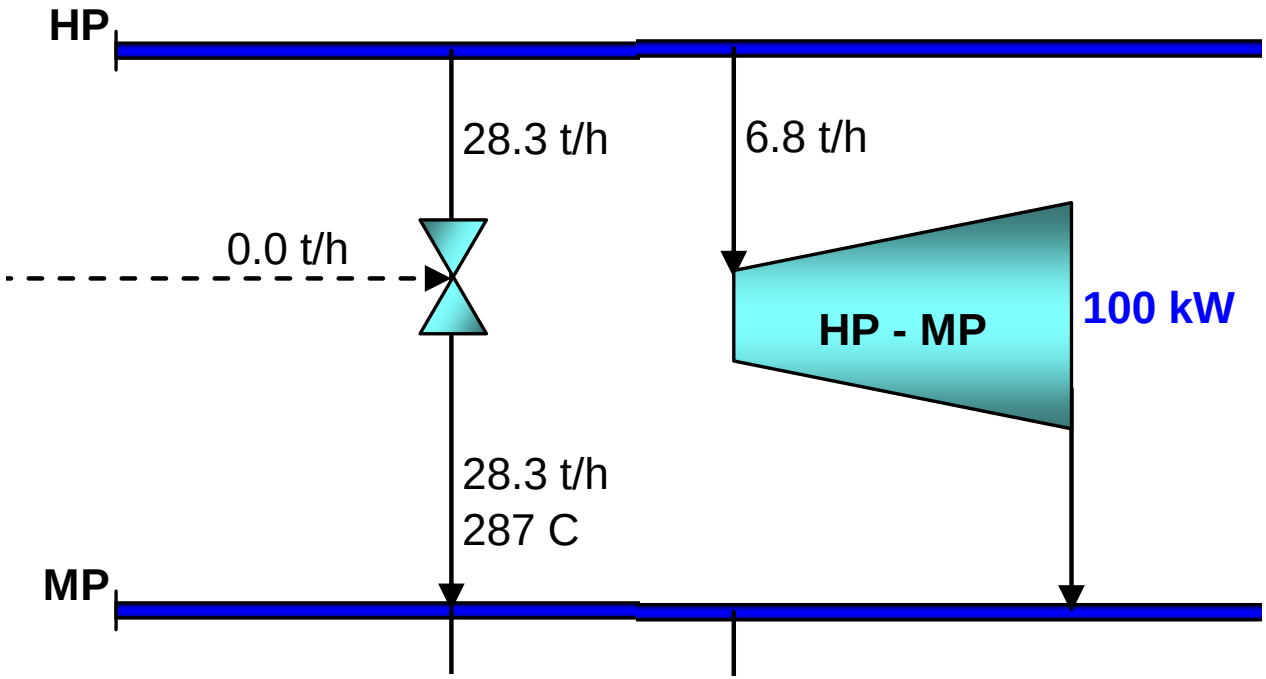

UNIDO 2012, all rights reserved

Student Exercise Answers

- Steam System Assessment Tool
  - Steam Turbine versus Electric Motor
    - Results

Model Status : OK

Cost Summary ($ '000s/yr)	Current Operation	After Projects	Reduction	
Power Cost	6,439	6,346	92	1.4%
Fuel Cost	20,095	20,117	-22	-0.1%
Make-Up Water Cost	507	508	-1	-0.1%
Total Cost (in $ '000s/yr)	**27,040**	**26,970**	**70**	**0.3%**

On-Site Emissions	Current Operation	After Projects	Reduction	
CO2 Emissions	368484 t/yr	368888 t/yr	-404 t/yr	-0.1%
SOx Emissions	2677 t/yr	2680 t/yr	-3 t/yr	-0.1%
NOx Emissions	1029 t/yr	1030 t/yr	-1 t/yr	-0.1%

Power Station Emissions	Reduction After Projects	Total Reduction	
CO2 Emissions	627 t/yr	223 t/yr	-
SOx Emissions	2 t/yr	-1 t/yr	-
NOx Emissions	1 t/yr	0 t/yr	-

Note - Calculates the impact of the change in site power import on emissions from an external power station. Total reduction values are for site + power station

UNIDO 2012, all rights reserved

Student Exercise Questions

- Steam System Assessment Tool
  - 3E Plus Piping Insulation Problem
    - One of the process units is supplied medium-pressure steam through a 150 mm nominal diameter header
    - A 10 m long section of the header was observed to be un-insulated—the result of a past maintenance activity
    - The rest of the piping system is covered with a 50 mm thick calcium silicate insulation and aluminum jacket
    - Ambient conditions are typical for an industrial facility
    - The piping is located outside on a pipe bridge
    - Determine the energy loss reduction and economic impact associated with replacing the missing insulation

UNIDO 2012, all rights reserved

Student Exercise Answers

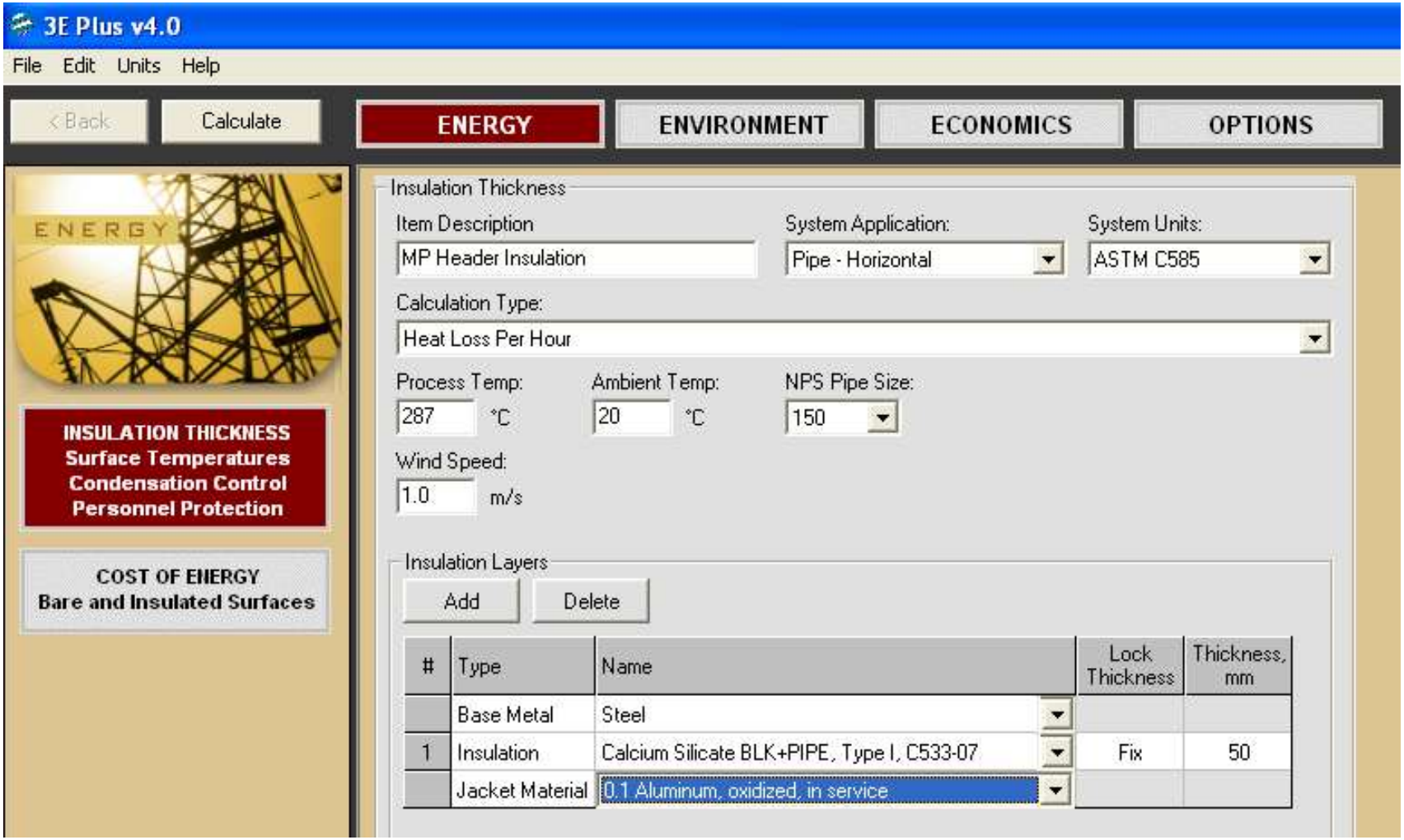

UNIDO 2012, all rights reserved

Student Exercise Answers

3E Plus v4.0

File Edit Units Help

< Back | Calculate | ENERGY | ENVIRONMENT | ECONOMICS | OPTIONS

INSULATION THICKNESS
Surface Temperatures
Condensation Control
Personnel Protection

COST OF ENERGY
Bare and Insulated Surfaces

Heat Loss Per Hour Report

Item Description: **MP Header Insulation** System Units: **ASTM C585**
Geometry Description: **Steel Pipe - Horizontal**
Bare Surface Emittance: **0.8** Nominal Pipe Size: **150 mm**
Process Temp: **287.0 °C** Ave. Ambient Temp: **20.0 °C** Ave. Wind Speed: **1.0 m/s**
Relative Humidity: **N/A** Dew Point: **N/A**
Condensation Control Thickness: **N/A**
Outer Jacket Material: **Aluminum, oxidized, in service** Outer Surface Emittance: **0.1**
Insulation Layer 1: **Calcium Silicate BLK+PIPE, Type I,** Thickness: **50.0 mm**

Append To Audit | Browse...

Variable Insulation Thickness	Surface Temp (°C)	Heat Loss (W/m)	Efficiency (%)
Bare	286.0	3511.00	
Layer 1	54.6	235.10	93.30

UNIDO 2012, all rights reserved

Student Exercise Answers

$$Q_{saved} = (3{,}511 - 235.1) \times 10 = 32.8\,kW$$

$$Fuelsaved = 32.8\,\frac{kJ}{s} \times 3{,}600\,\frac{s}{hr} \times 8{,}760\,\frac{hr}{yr} \times \frac{1}{0.851} = 1{,}215.5\,\frac{GJ}{yr}$$

$$Fuelsaved = 1{,}215.5\,\frac{GJ}{yr} \times \frac{1}{31{,}890}\,\frac{kg}{kJ} \times 1{,}000 \times 1{,}000 = 38{,}115\,\frac{kg}{yr}$$

$$Savings = 38{,}115\,\frac{kg}{yr} \times 150.0\,\frac{\$}{tonne} \times \frac{1}{1{,}000} = 5{,}717\,\frac{\$}{yr}$$

UNIDO 2012, all rights reserved

Student Exercise Answers

- If the energy impact is realized "at steam cost":

$$\dot{Q}_{total} = \dot{q}_{per\ length} L_{total}$$

$$\dot{Q}_{total} = \left(3{,}511 \tfrac{W}{m} - 235.0 \tfrac{W}{m}\right)(10\ m)$$

$$\dot{Q}_{total} = 32.8\ kW$$

Marginal Steam Costs	
(based on current operation)	
HP ($/t)	17.28
MP ($/t)	15.72
LP ($/t)	12.04

UNIDO 2012, all rights reserved

Student Exercise Answers

Location	Temperature (ºC)	Specific Volume (m3/kg)	Enthalpy (kJ/kg)	Quality (%)	Pressure (bar[g])
Steam	287	0.22760	3,019.8	****	10.00
Saturated Vapor	184	0.17730	2,781.0	100.0	10.00
Saturated Liquid	184	0.00113	781.5	0.0	10.00

$$\dot{m}_{steam} = \frac{\dot{Q}_{total}}{\left(h_{steam} - h_{condensate}\right)} = \frac{32.8\,kW}{\left(3{,}019.8\,\frac{kJ}{kg} - 781.5\,\frac{kJ}{kg}\right)}$$

$$\dot{m}_{steam} = 0.015\,\frac{kg}{s} = 52.8\,\frac{kg}{hr}$$

UNIDO 2012, all rights reserved

Student Exercise Answers

$$\dot{K}_{steam} = \dot{m}_{steam} k_{steam}$$

$$\dot{K}_{steam} = 52.8 \frac{kg}{hr} \left(15.72 \frac{\$}{tonne}\right) \left(\frac{1}{1{,}000} \frac{tonne}{kg}\right)$$

$$\dot{K}_{steam} = 0.83 \frac{\$}{hr} \left(\frac{8{,}760 hrs}{1 yr}\right) = 7{,}271 \frac{\$}{yr}$$

If the cost of steam is known

- SSAT steam demand project can also be utilized

UNIDO 2012, all rights reserved

Industrial Steam System Energy Assessment Report

UNIDO 2012, all rights reserved

Energy Assessment Report

- Example – US DOE Steam Energy Assessment Report
- General Information about the plant
  - Industry type
  - Size
  - Location
  - Plant personnel
  - Energy Expert, etc.

Save Energy Now Assessment Report

ESA-043-5

General Assessment Information

Company: Citgo Refining Company
Plant: CITGO Petroleum Corporation
Location: Lemont, IL

Assessment Type: Steam
Assessment Dates: 1/17/2011 - 1/20/2011

Plant Information

NAICS: 324110
Principal Products: Gasoline & other blends
Address: 135th and New Avenue, Lemont, IL, 60439

Employed: 800
Floor Area: 1,000 acres

Participant Contact Information

Plant Contact

Name:
Phone:
Email:

Energy Expert Contact

Name: Riyaz Papar
Company: Hudson Technologies Company
Phone: 281 298 0975
Email: rpapar@hudsontech.com

Corporate Contact

Name:
Phone:
Email:

Technical Account Manager Contact

Name:
Phone:
Email:

Additional Plant Attendees

UNIDO 2012, all rights reserved

Basic Plant Information

Appendix A: Basic Plant Information

Basic Plant Information:			
Plant Name:	CITGO Petroleum Corporation	Address:	135th and New Avenue
Primary Product:	Gasoline & Other fuel blends	State:	IL
Industry Type:	Petroleum	City:	Lemont
NAICS Code:	324110	ZIP:	60439

Plant Background and Process Description

The CITGO Petroleum Corporation refinery is located in Lemont, IL and has a capacity of ~170,000 barrels per day crude oil throughput.

Annual Utility Consumption

	Annual Usage	Avg. Annual Demand	Annual Cost	Unit Cost	CO_2 Emission (Metric Tons)
Electricity	kWh	kW	$$$$	$/kWh	XXX
Natural Gas	GJ		$$$$	$/GJ	YYY
Other Gas	GJ		$$$$	$/GJ	
Total	**GJ**		**$$$$**		

UNIDO 2012, all rights reserved

Energy Saving Opportunities

- Summary of energy saving opportunities

Assessment Opportunities		Estimated Annual Savings					Simple payback (years)
ESO#	Recommended Opportunities	kWh	kW	GJ	CO2 (Metric Tons)	Cost Savings ($)	
1							
2							
3							
4							

UNIDO 2012, all rights reserved

Qualitative Recommendations

1.	Continue with the steam trap management program
2.	Increase condensate return to the conservation area
3.	Reduce the amount of steam to flares
4.	Reduce the amount of steam to equalization tank
5.	Combined Heat and Power (CHP) installation
6.	Steam system optimization
7.	Calibration of instruments
8.	Portable instruments to be used by lead
9.	Continue monitoring and trending equipment efficiency

- Qualitative recommendations should capture
  - Opportunities that were NOT evaluated during the assessment and the plant is a good candidate for them
  - Areas which may NOT directly lend to quantification of energy savings by implementing them

UNIDO 2012, all rights reserved

Observed Best Practices

- Observed Best Practices in the plant should be highlighted
- These should be encouraged by the Energy Expert
- These are Winners that the plant needs to be congratulated for

Observed Best Practices
1: Overall site level integration
Steam is generated at several different areas in the refinery but there is a central distribution system and site-wide steam header network and integration.
2: Significant instrumentation for energy balance analysis
There is a significant amount of instrumentation that monitors critical operating parameters and a PI historian system that helps plant personnel to do a mass and energy balance analysis.
3: High level of system-based and equipment-based energy efficiency metrics and KPIs
With the significant amount of real-time data collection, the plant has a program to determine system-based and equipment-based efficiency metrics and KPIs. Some examples include: amount of fuel used per lb of steam produced, energy intensity index, etc.
4: Record and log of water treatment, blowdown, etc.
Plant personnel manually log information from water testing that is done on a regular basis.
5: Stack heat recovery on boilers
Most of the boilers (CO, Aux and Package) have feedwater economizers that capture stack loss from the boilers and improve boiler efficiency.
6: Blowdown flash heat recovery
Most boilers and waste heat steam generators have blowdown flash steam recovery.
7: Oxygen trim controllers on all boilers
Oxygen trim controllers allow to keep very tight excess air levels and minimize stack losses.
8: Operation with NO extra boilers
The plant demand is such that every steam generating asset is utilized to its fullest in winter Then, in summer, the rental boiler doesn't operate.
9: Use of backpressure turbines for pressure letdown
There are several backpressure steam turbines that drive mechanical equipment and maintain a

UNIDO 2012, all rights reserved

Energy Saving Opportunity

- Each Energy Saving Opportunity should be described in detail:
  - Background
  - Exact Recommendation
  - Estimated Savings
  - Methodology for Calculations of Savings
  - Implementation Cost
  - Methodology for Calculations of Implementation Cost
  - Next steps towards implementation

ESO # 1 : Improve generation efficiency of boiler

ARC: 2.2412	Estimated Annual Savings			Estimated Project Cost		Simple Payback (years)
	Resource	CO_2 (metric ton)	Dollars	Low	High	
Natural Gas	ZZ GJ	CC	$$$$			
Total		**CC**	**$$$$**	**$LLLL**	**$HHHH**	**1.0 - 2.0**

Background

The boiler averages ~XX Tph of steam production over the whole winter season. It operates at a maximum of YY Tph and there are times during the winter when this rental boiler is at its maximum firing rate. It doesn't have a feedwater economizer. According to plant personnel, it has a positional oxygen (excess air) control system but no in-situ measurements exist on this boiler. Due to unavailability of port holes in the stack, readings could not be taken with the Energy Expert's portable combustion analyzer either. Based on past experience with rental boilers and plant personnel's observations, it is estimated that the rental boiler operates at ~76% boiler efficiency.

Recommendation

It is recommended to incorporate an automatic oxygen trim controller that maintains 2-3% flue gas oxygen and install a modular feedwater economizer in the flue gas stack.

Estimated Savings

Based on a new potential stack temperature of 275°F and 3% oxygen, stack loss can be reduced to 15% from the current operation at 22%. Using a SSAT model, the annual energy savings (with only winter operation) are expected to be ~ZZ GJ. This would be equivalent to natural gas savings of ~$$$$.

Implementation Cost and Simple Payback

Typical feedwater economizer projects result in less than a year simple paybacks. Adding automatic oxygen trim controllers can have much faster paybacks. Given that this boiler is only used during the "winter" operating season, it is anticipated that simple paybacks on this ESO will be 1-2 years.

Next Actions Towards Implementation

Plant personnel should work with their rental boiler company to come up with a possible quotation on adding a modular feedwater economizer in the flue gas stack of the boiler. Additionally, they should investigate the cost of adding an automatic oxygen trim controller on this boiler.

UNIDO 2012, all rights reserved

Example Saving Calculation Methodology

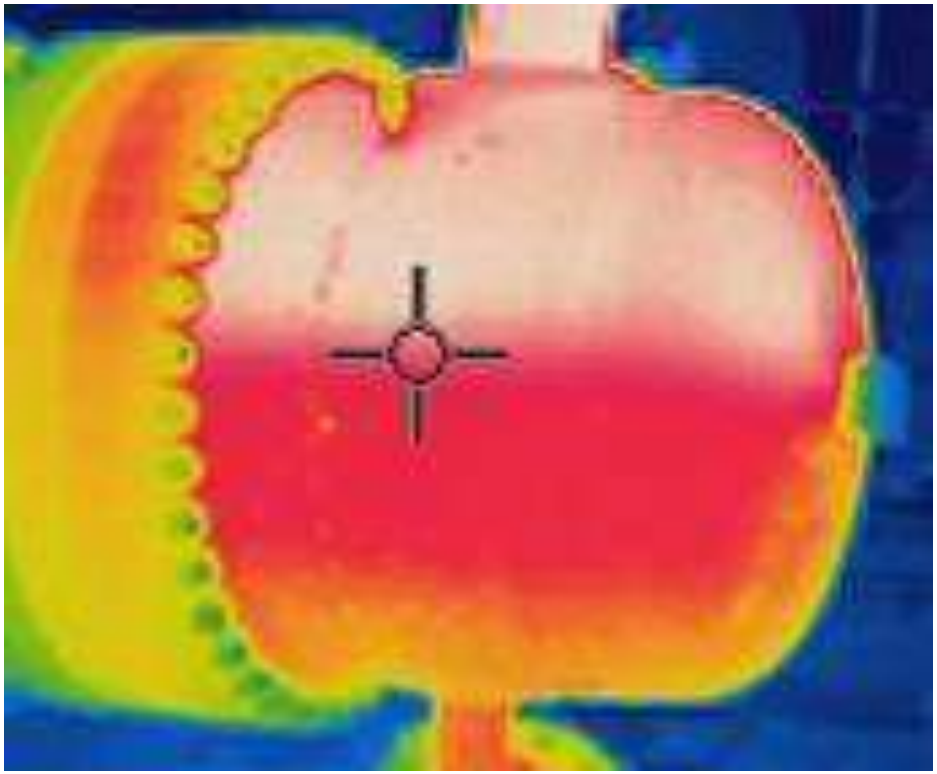

13 GJ/ft^2/yr
$500

124 GJ/ft/yr
$2,000/yr

UNIDO 2012, all rights reserved

Some "Common" Specific Applications

Extraction Turbines

Waste Heat Recovery Boilers

Heat Exchangers

Thermocompressors

Absorption Chillers

UNIDO 2012, all rights reserved

Extraction Steam Turbines

- Extraction turbines require special attention in SSAT models

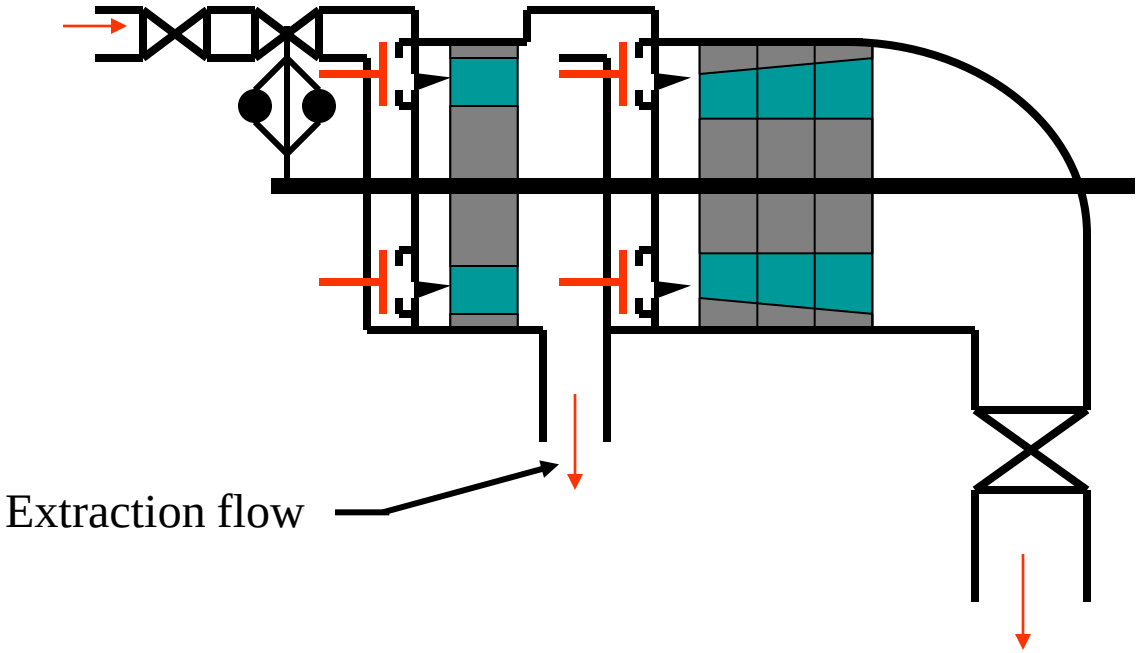

Extraction Turbine

UNIDO 2012, all rights reserved

Extraction Steam Turbines

- A simple approach can result in a robust representation of the system but slight thermodynamic changes

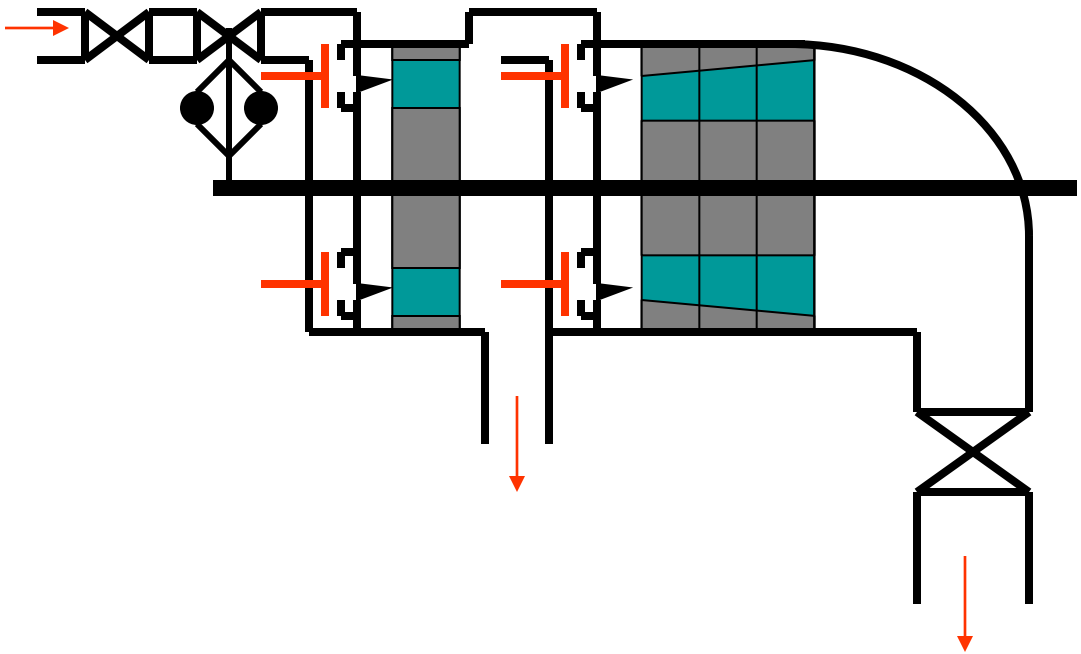

Extraction Turbine

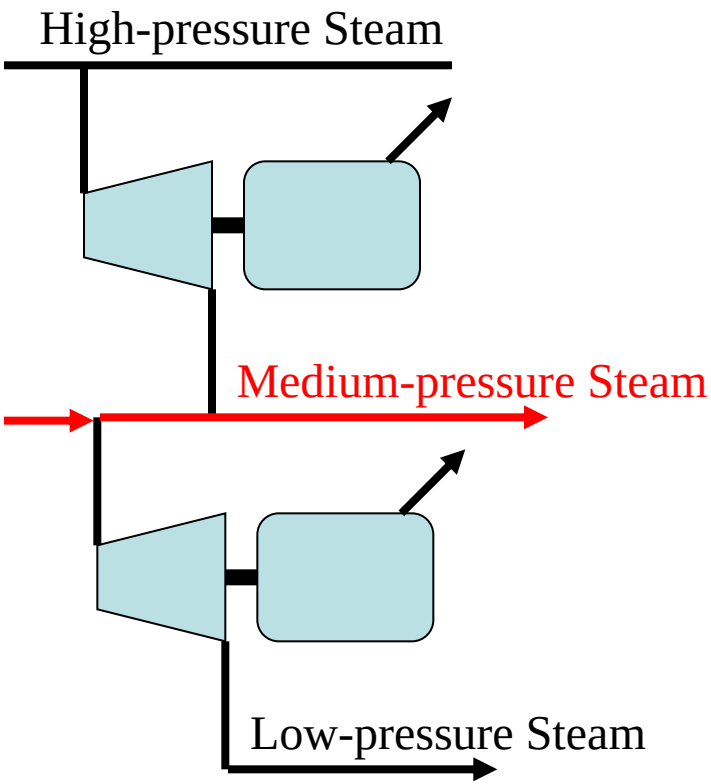

SSAT Model Arrangement

UNIDO 2012, all rights reserved

Extraction Steam Turbines

- Neither of the two techniques is perfect
  - HP-MP coupled with MP-LP compromises the steam condition entering the MP-LP turbine
  - HP-MP coupled with HP-LP requires judicious flow management
    - More accurate method from a thermodynamic standpoint

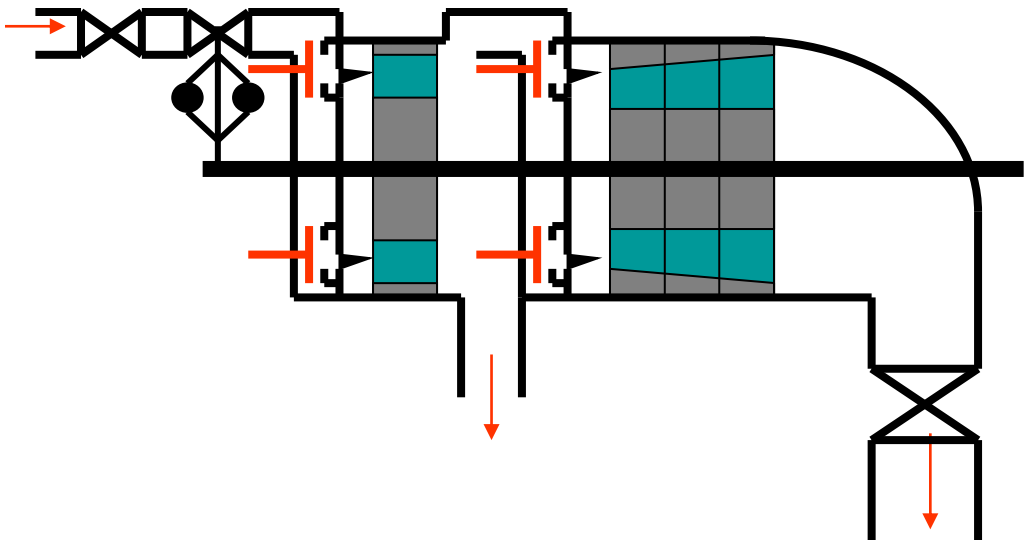

Extraction Turbine

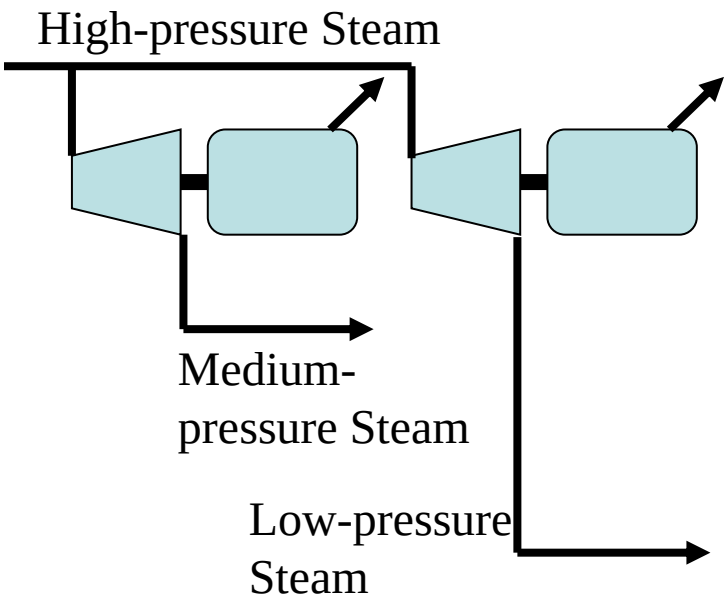

SSAT Model Arrangement

UNIDO 2012, all rights reserved

Extraction-Condensing Steam Turbines

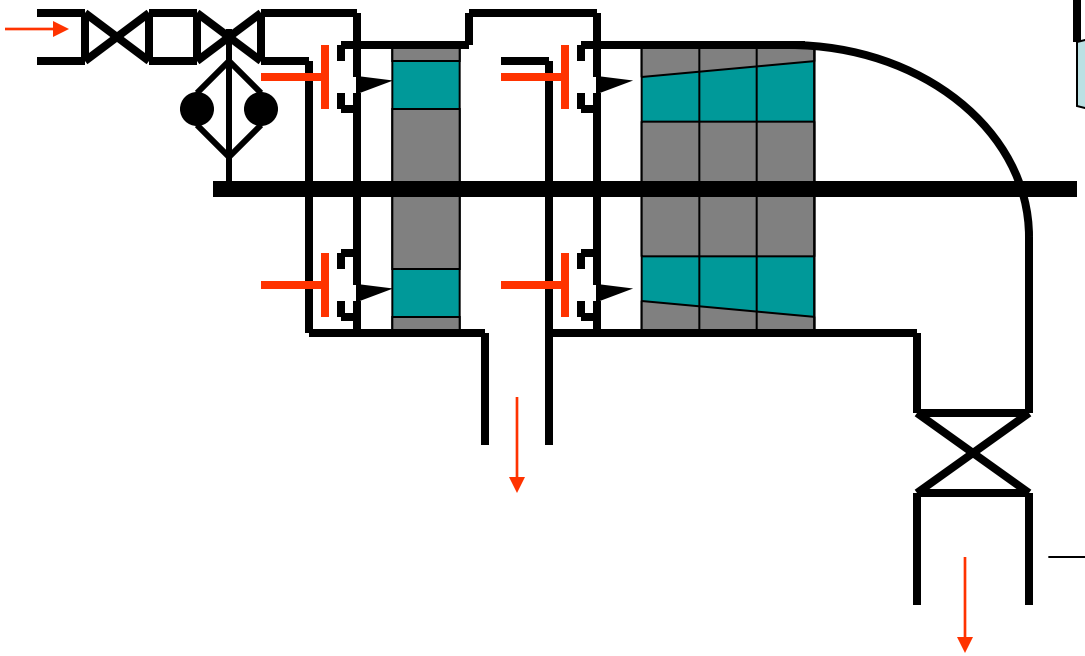

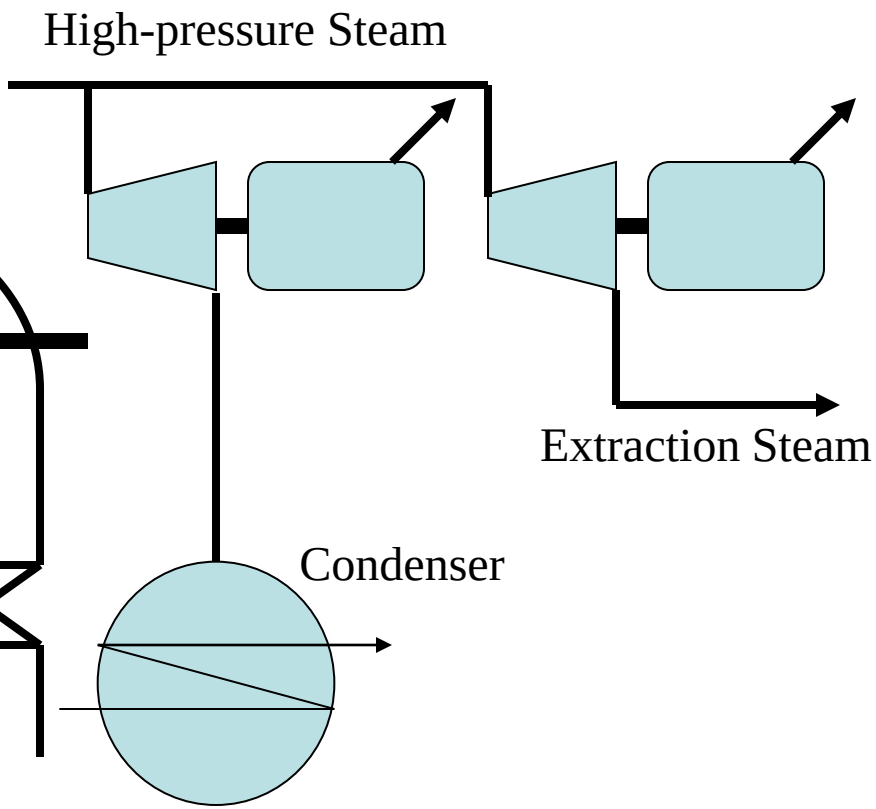

Extraction Turbine

SSAT Model Arrangement

UNIDO 2012, all rights reserved

Waste Heat Recovery Boilers

- Waste Heat Recovery (WHR) boilers can take several forms depending on the source of waste heat
  - Heat Recovery Steam Generators (HRSGs) on exhaust of combustion turbines
  - Exothermic reaction in a process
  - Heat of combustion of burning waste liquids, etc. in an incinerator
  - Recovery of chemicals
  - Stack loss from a process heater, furnace, etc.
- In most cases, WHR boilers are NOT Impact boilers
- In several cases, WHR boilers may be generating steam at a medium or lower pressure

UNIDO 2012, all rights reserved

Waste Heat Recovery Boilers

- The main questions that need to be answered in an analysis with WHR boilers
  - Can more steam be produced from the WHR boilers?
  - If yes, then is the steam system still balanced from a demand and supply perspective?
  - Can steam produced from the WHR boiler offset steam produced from a fuel-fired boiler?

- From a modeling perspective, WHR boilers are best handled by Project 1 – Steam demand savings, if there is a fuel-fired impact boiler in the plant whose load can be reduced due to the steam produced by the WHR boiler

UNIDO 2012, all rights reserved

Heat Exchanger Operation

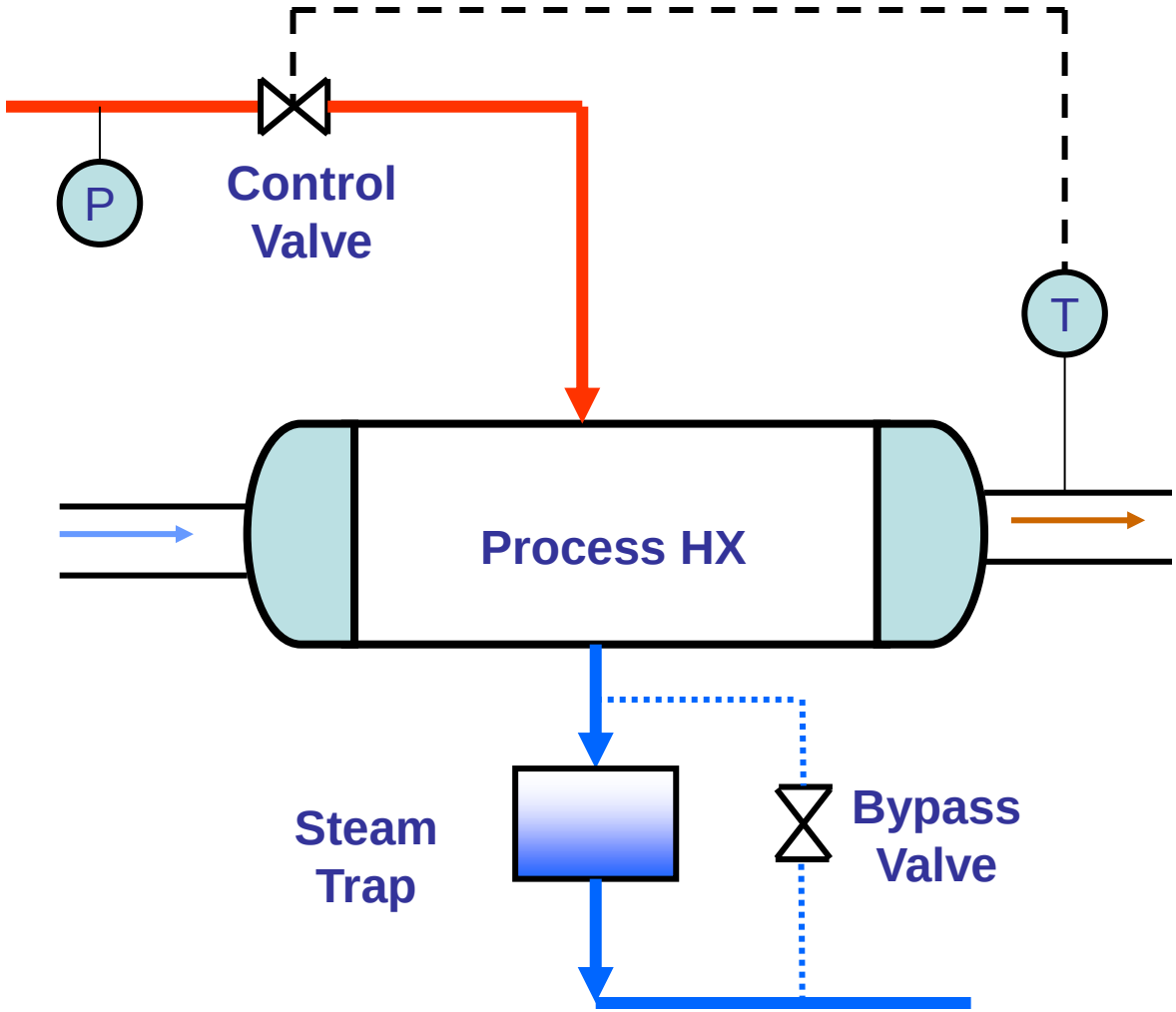

UNIDO 2012, all rights reserved

Heat Exchanger Performance

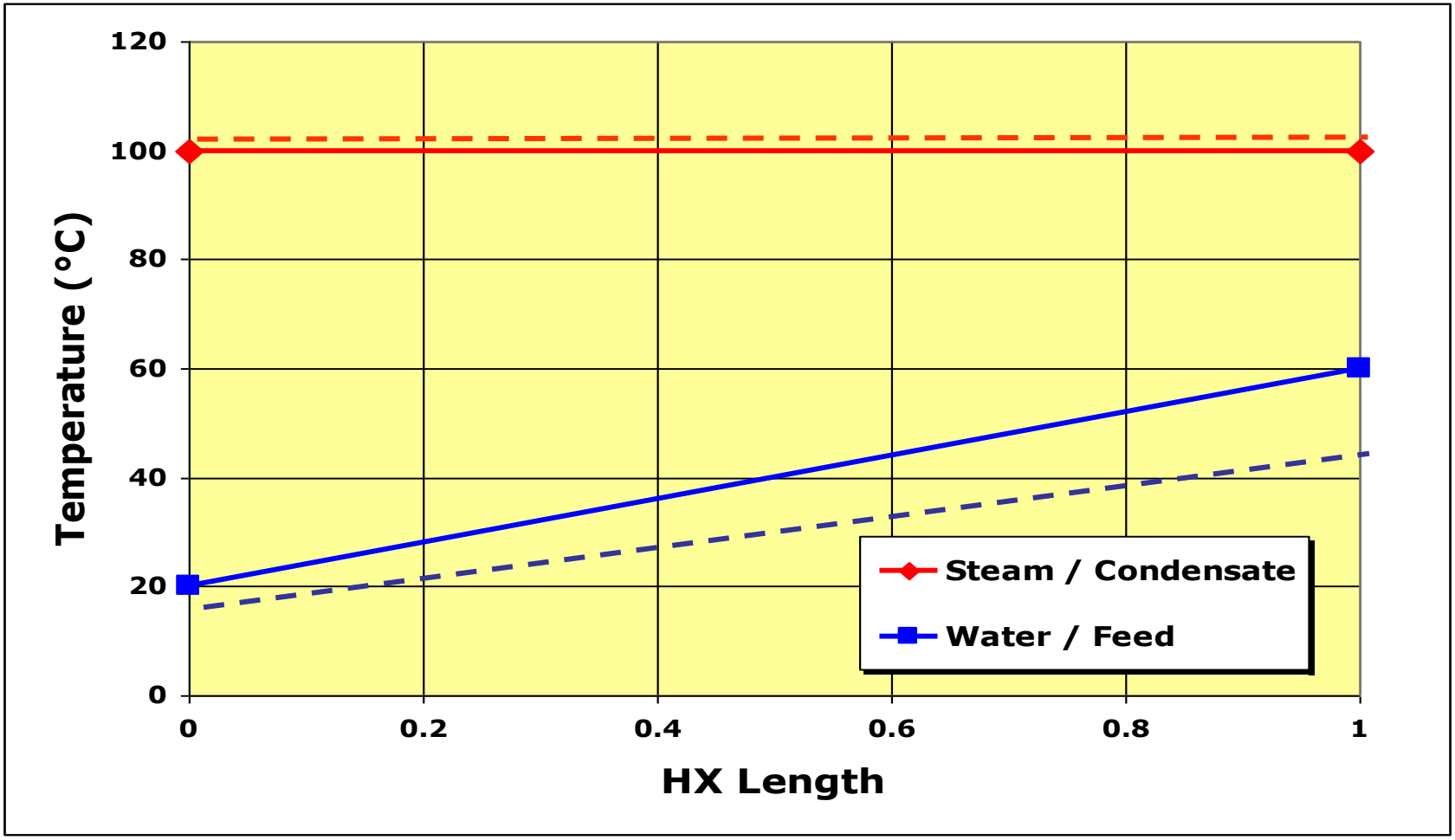

UNIDO 2012, all rights reserved

Heat Exchanger Performance

$$Q = m_{steam} * \left(h_{steam} - h_{cond}\right)$$

- Heat Exchanger fouling results in the following
  - Driving temperature (steam) increases
  - Steam pressure increases
  - Condensate enthalpy increases
  - Enthalpy difference (steam and condensate) reduces
  - For the same heat duty, more mass flow of steam is required
  - If condensate is not collected – leads to additional penalty
  - If condensate goes to atmospheric flash – energy loss occurs due to more flashing

UNIDO 2012, all rights reserved

Heat Exchanger Performance

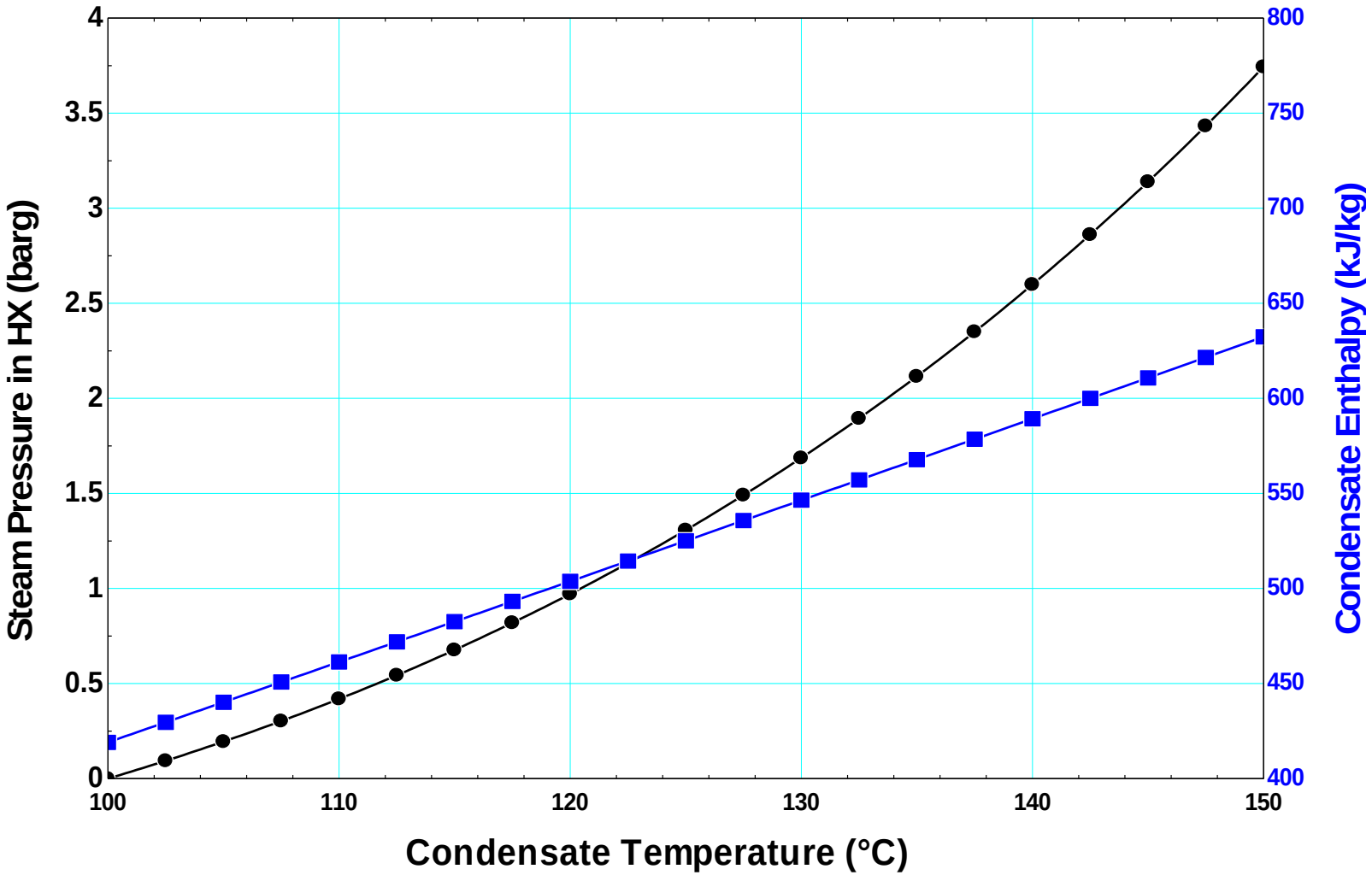

UNIDO 2012, all rights reserved

Heat Exchanger Performance

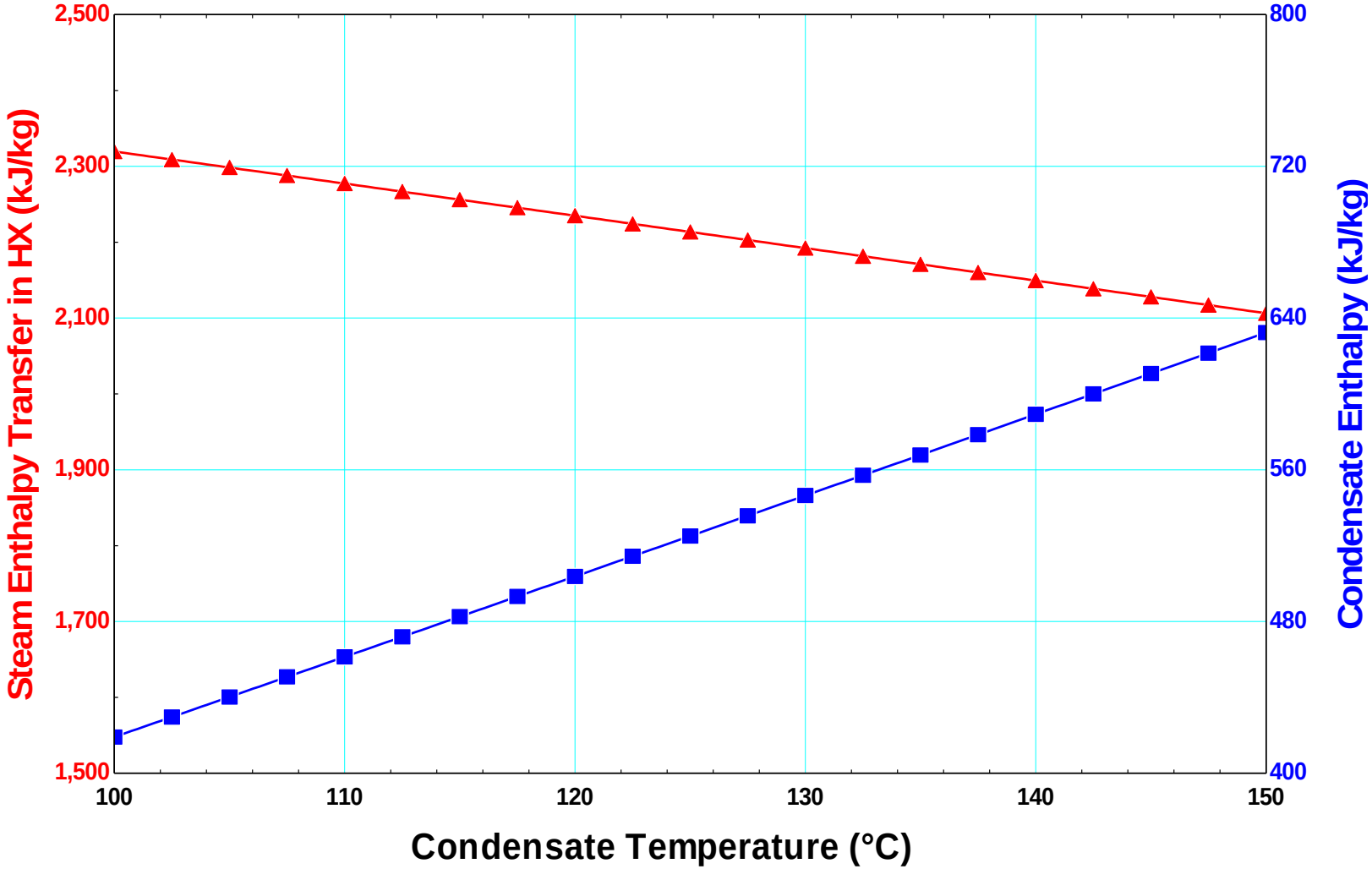

UNIDO 2012, all rights reserved

Heat Exchanger Performance

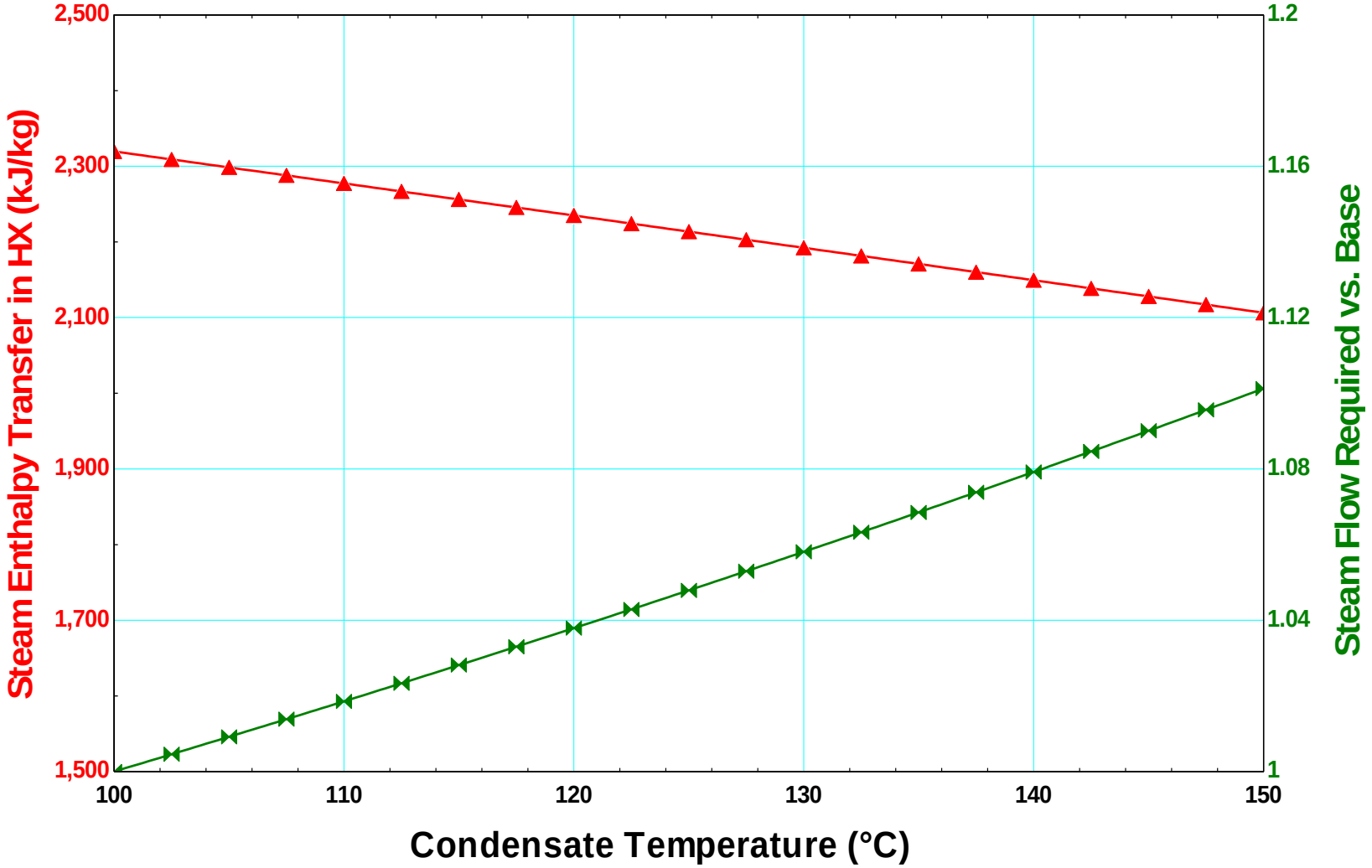

UNIDO 2012, all rights reserved

Thermocompressors

- Provide the ability to upgrade low pressure (waste) steam to medium pressure steam thereby reducing the amount of high pressure steam required

- Mechanical vapor compression can also be an alternate option for thermocompressor applications

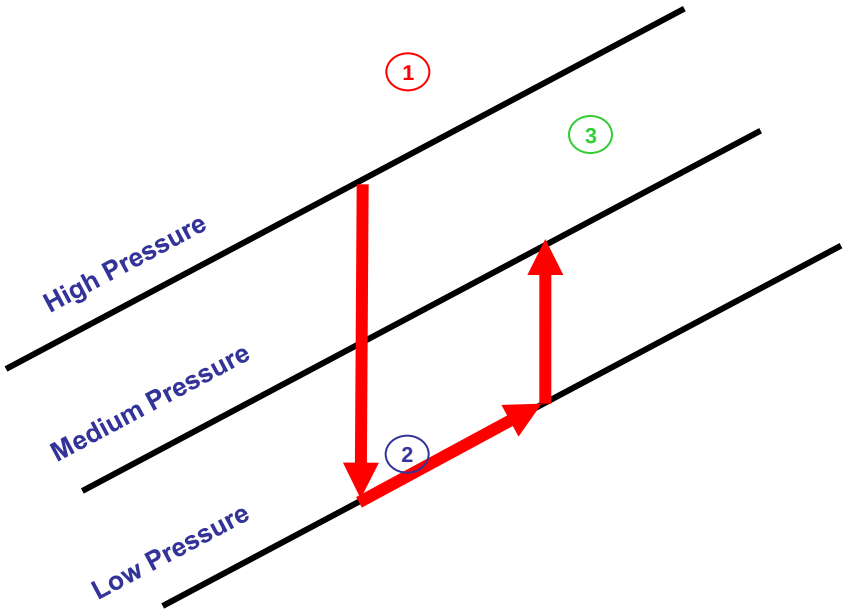

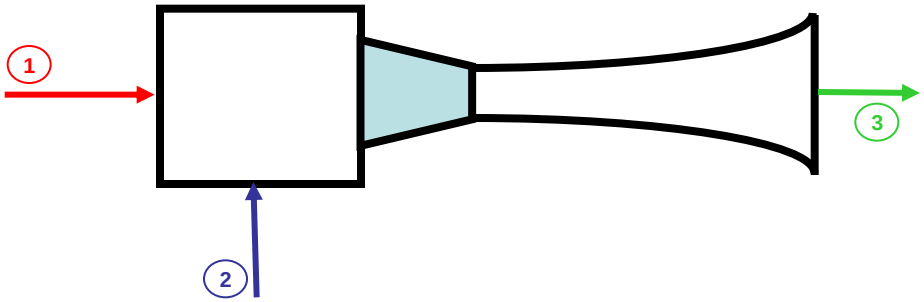

UNIDO 2012, all rights reserved

Evaporators & Use of Thermocompressors

Typical – 3 Effect

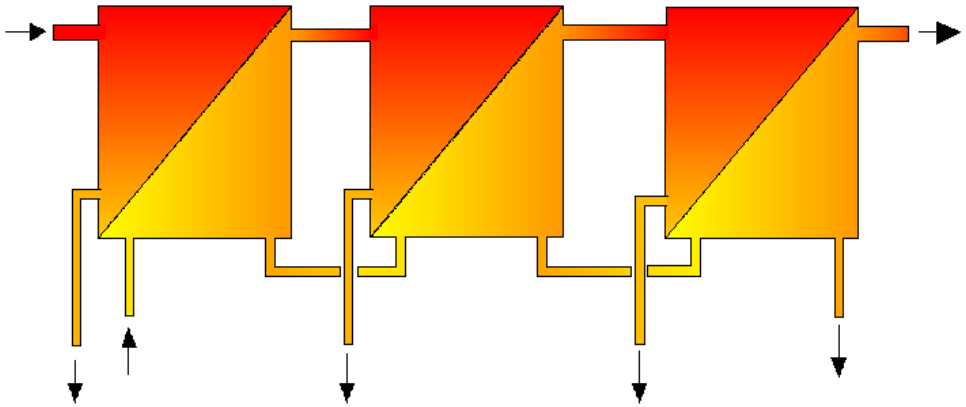

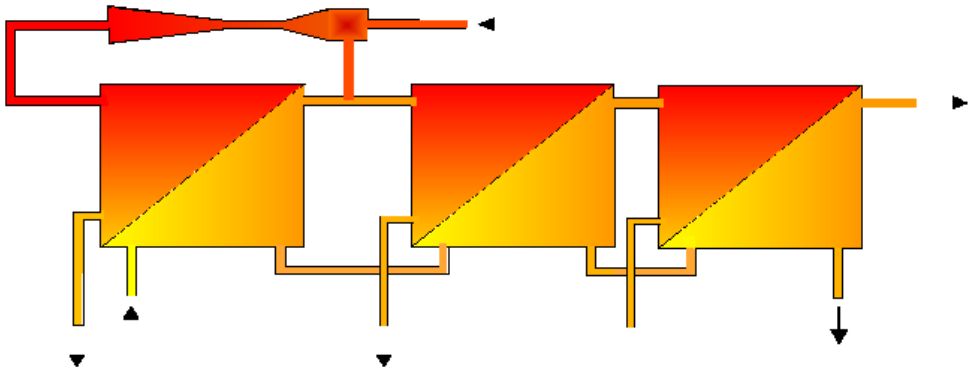

With Thermocompressor

Jim Munch, JMPS

UNIDO 2012, all rights reserved

4-Effect Thermocompressor

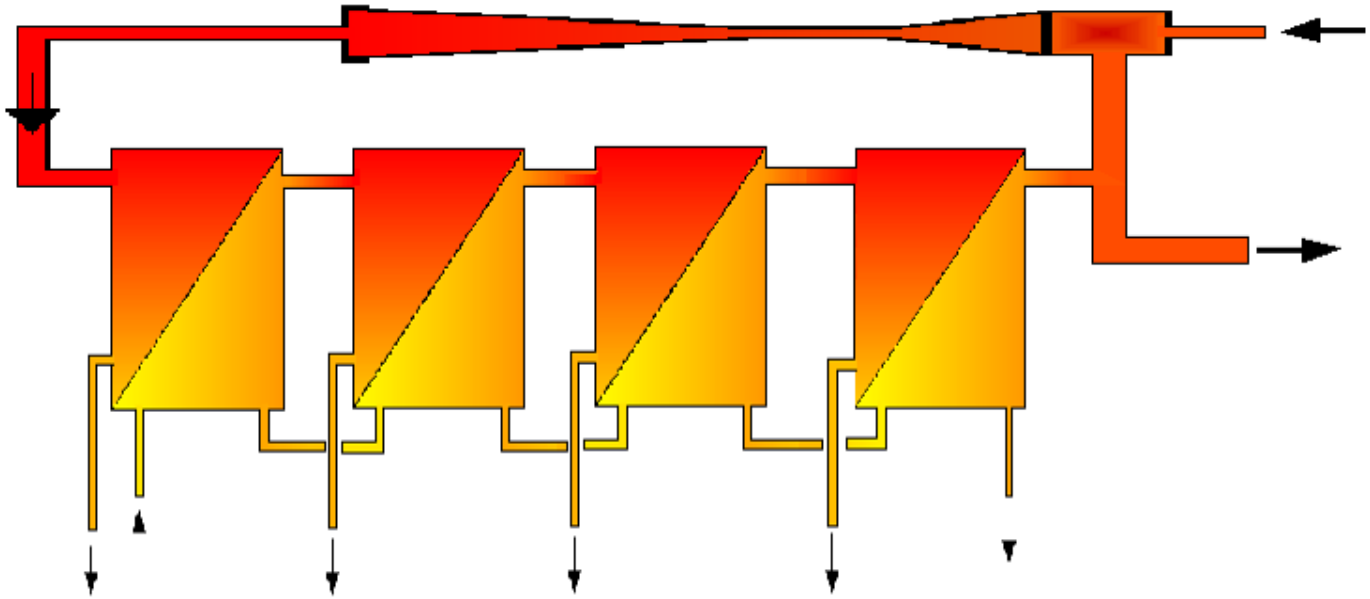

- Contamination in condensate?
- Temperature difference / Pressure ratio
- Very application and site specific

Jim Munch, JMPS

UNIDO 2012, all rights reserved

Thermocompressor Analysis

- Thermocompressor analysis requires a thorough understanding of process needs
- Identify the source of waste (or low pressure) steam that is currently vented
- Identify a process that requires steam and is currently using high or medium pressure steam
- Identify motive steam (typically, highest pressure steam) available in the plant
- Work with a manufacturer to select a thermocompressor based on
  - Pressure ratios
  - Steam flows

UNIDO 2012, all rights reserved

Absorption Chillers

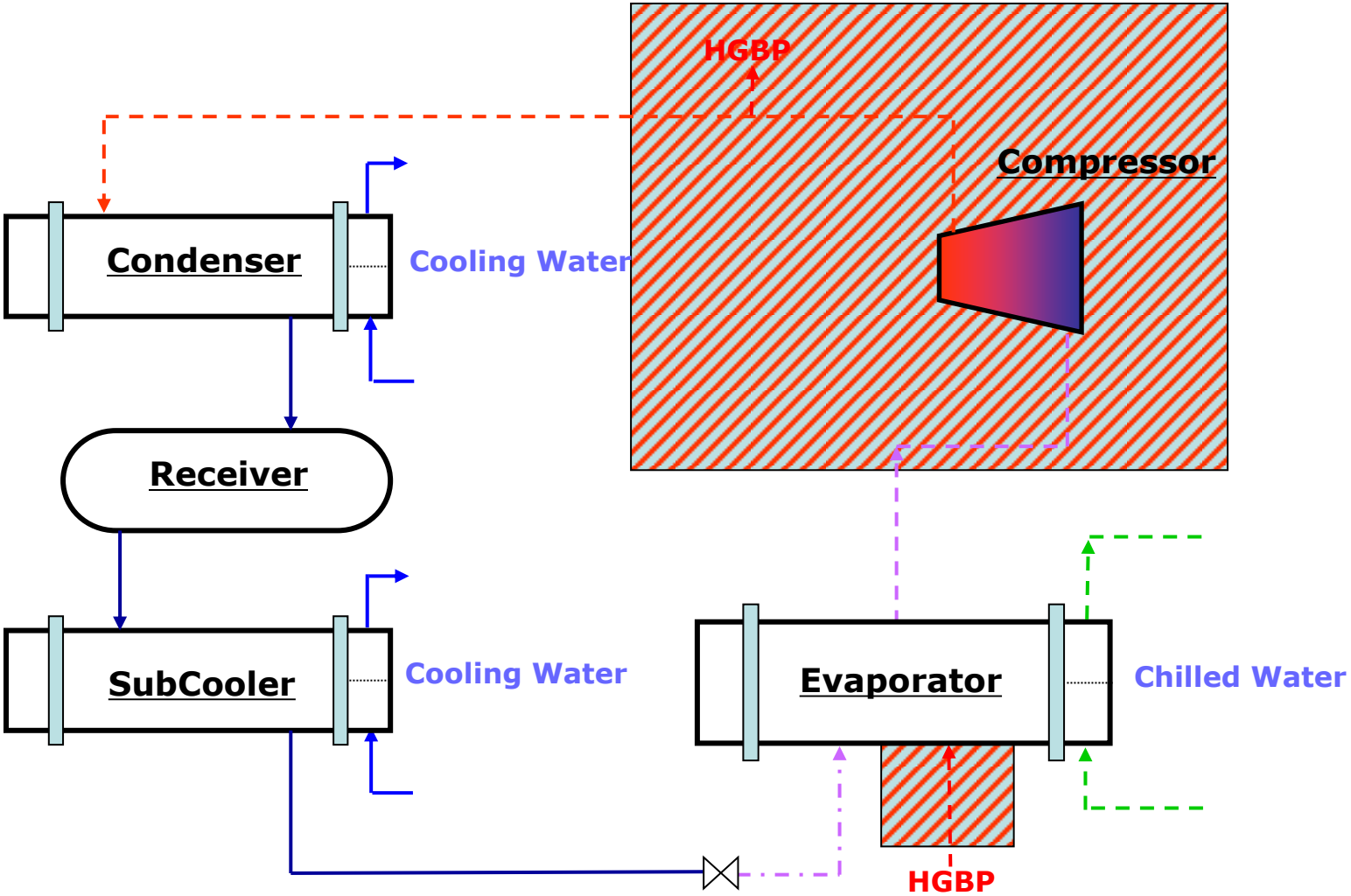

UNIDO 2012, all rights reserved

Absorption Chillers

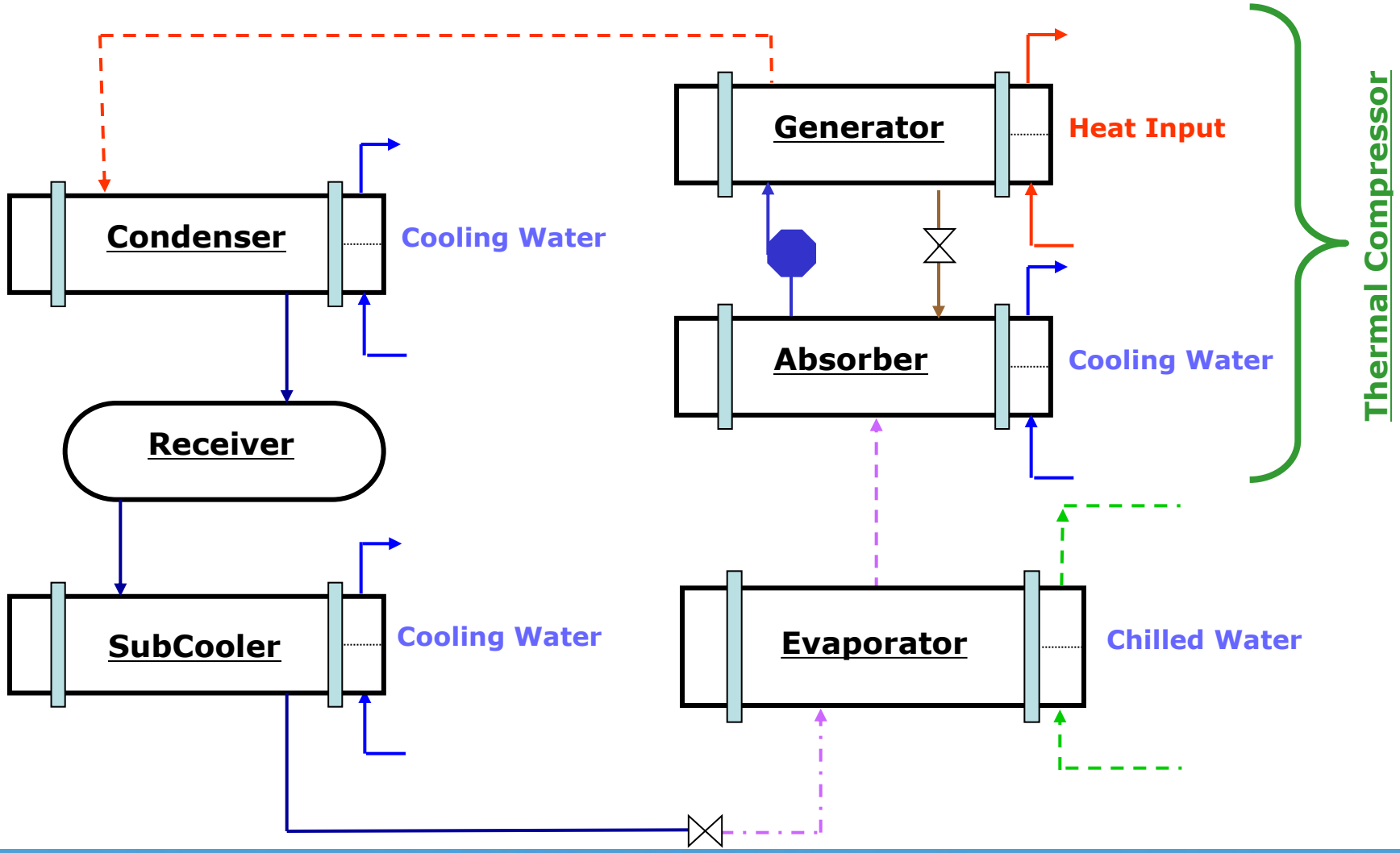

UNIDO 2012, all rights reserved

THIS SLIDE IS NOT TO BE PRINTED

There are several Case Studies provided in this section. It is expected that based on the audience and the applicability of possible projects in the HOST plant and in the country, the Instructors choose 2 or 3 Case Studies to demonstrate Steam System Optimization Projects in the Industry. The additional Case Studies can be left as Reference Material for the Students

UNIDO 2012, all rights reserved

Case Study - Conclusions

- The SEN assessment provided Chrysler with a targeted list of energy savings opportunities
- Chrysler's approach with an Energy Champion paid off from implementing the projects with the highest efficiency
- For the implemented projects, Chrysler had a payback of just over 2 months!
- Almost all boiler plants have multiple boilers and an optimal operating strategy must be implemented as BestPractices
- Operator buy-in and training is extremely important
- A thorough risk assessment paved the way for implementation and buy-in from plant management and production leads

UNIDO 2012, all rights reserved

Case Study – Del Monte Foods 1

- Plant: Del Monte Foods, Modesto, California, USA
- Installation of Feedwater Economizer and Condensing Economizer on boilers
- Boiler Specifications
  - Boiler 1:
    - Capacity: 70 Tons/hr
    - Pressure: 10 bars
    - Saturated steam production

UNIDO 2012, all rights reserved

Case Study – Del Monte Foods 1

- Typical operating data from Boiler 1
  - Flue gas side
    - Stack temperature: 271.5 °C
  - Feedwater side
    - DA water outlet temperature: 100.0 °C
- Hence, there exists a potential opportunity to do heat recovery
- Heat recovered = M*Cp*ΔT = **2,000 kW**

UNIDO 2012, all rights reserved

Feedwater Economizer

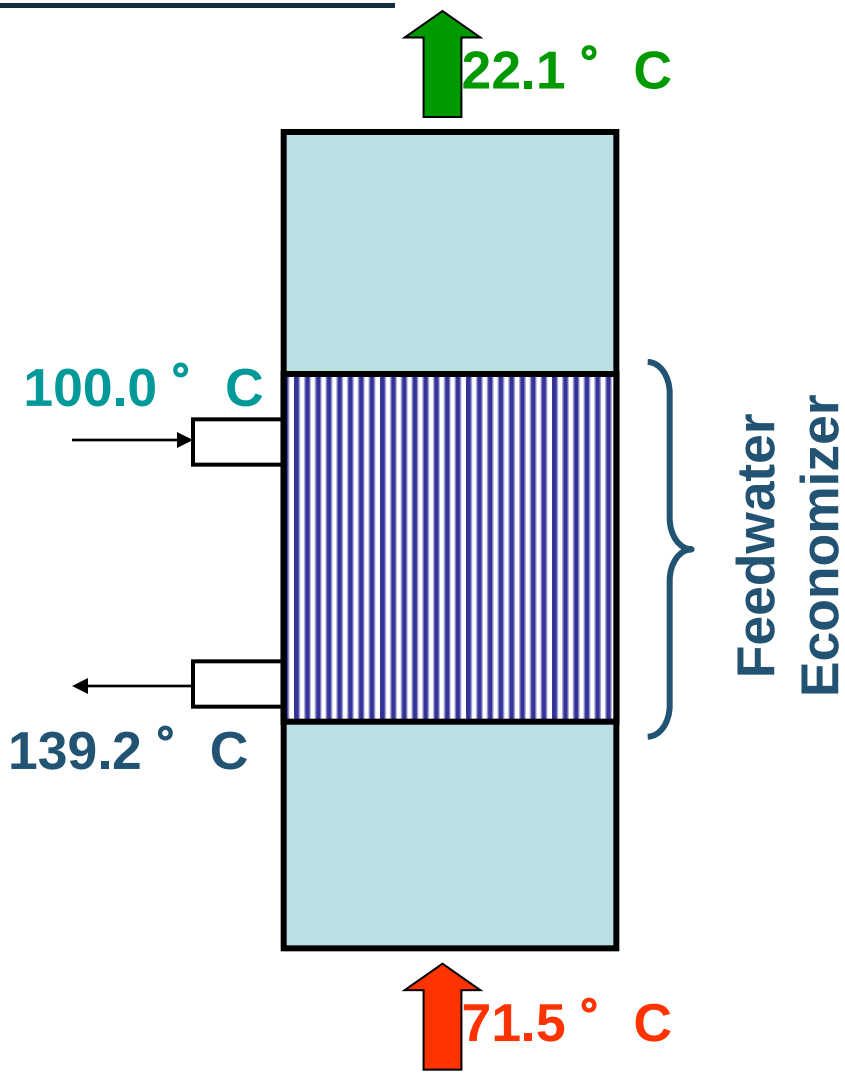

UNIDO 2012, all rights reserved

Feedwater Economizer Economics

- Feedwater Economizer Economics
  - Fuel savings = $250,000
  - Project cost ~ $250,000
  - Simple Payback ~ 1 year

- There were other retrofit projects bundled with this project to keep total project cost down
  - SCR implementation
  - FGR controls

UNIDO 2012, all rights reserved

Feedwater Economizer Economics

- Flue gas exit from the feedwater economizer on Boiler 1 was 122.1°C
- The plant has NO condensate return and so is 100% make-up water
  - Process requires live steam injection into cookers and water heaters
- Make-up water temperature is 20°C and there exists a significant opportunity to do condensing heat recovery
- Make-up water is heated up to at least 60°C
- Heat recovered = M*Cp*ΔT = **2,000 kW**

UNIDO 2012, all rights reserved

Condensing Economizers

UNIDO 2012, all rights reserved

Case Study – Refinery 1

- Optimize Operations between Steam Turbines and Electric Motors to minimize steam system losses

- Current configuration
  - Steam let down from **HP to MP** header is **18,850** tonnes
  - Steam letdown **MP to LP** header was **110,368** tonnes in 1996
  - Steam **venting** from LP steam header was **11,108** tonnes

- Action needed
  - Determine operating costs of all steam turbines & stand-by motor drives
  - Consider operation at different energy cost & steam balance scenarios
  - Decide a priority list of switch-over between motors & turbines

UNIDO 2012, all rights reserved

Case Study – Refinery 1

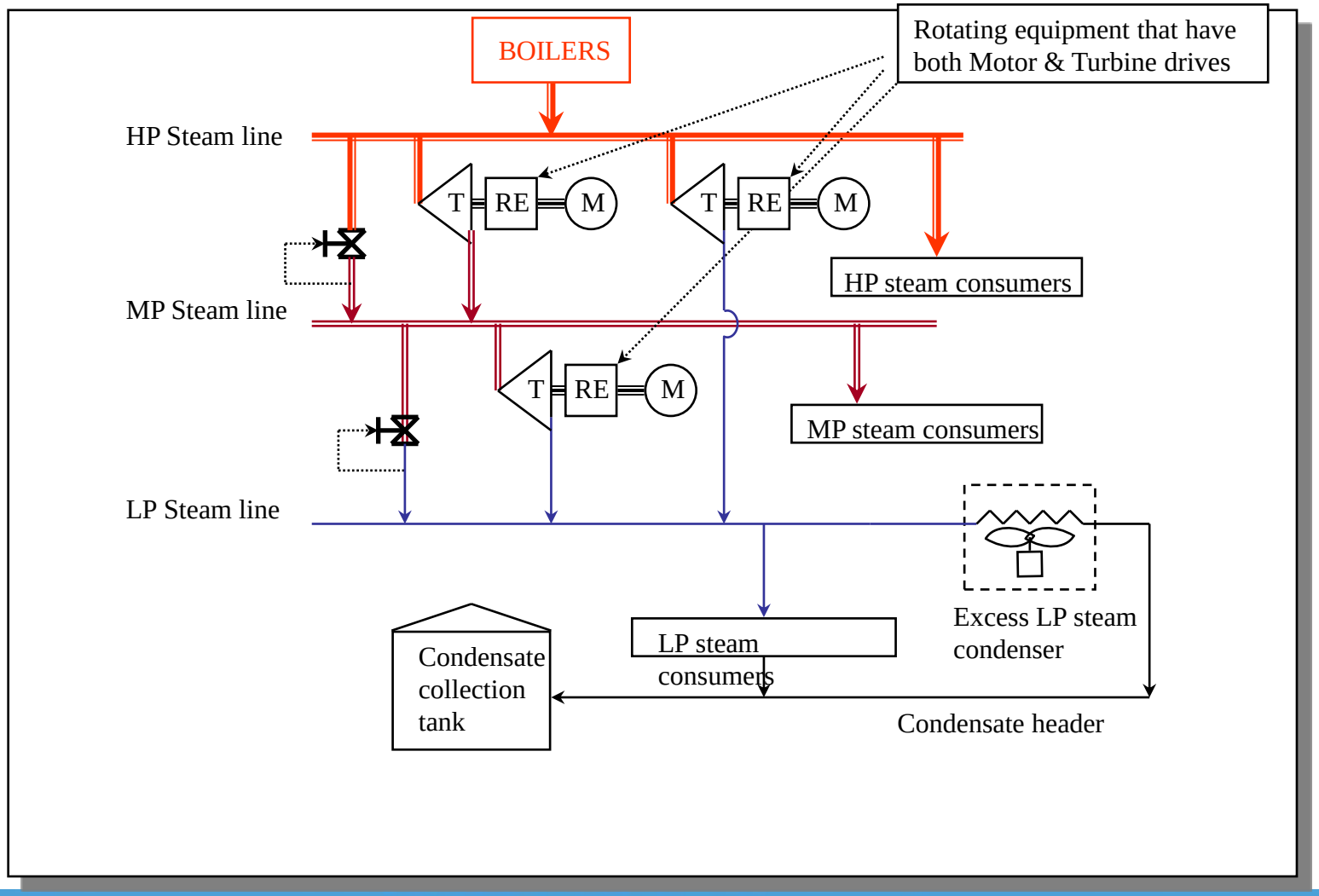

UNIDO 2012, all rights reserved

	Total available turbines	Turbines normally in service	Normal steam consumption	
			(Kg/hr)	(T/hr per turbine)
HP steam turbines				
C2 refrig compressor turbines	3	2	23,830	11.91
Air compressor turbines	2	1	7,207	7.21
Boiler feed pump turbines	3	3	16,847	5.62
Stabilizer reboiler turbines	14	12	64,924	5.41
Stabilizer inter-heater pumps # 1 – 4	4	4	15,480	3.87
Cooling water pump turbine (MP)	2	2	16,757	8.38
Stabilizer inter heater pumps # 5 – 7 (MP)	3	2	18,257	9.13
Stabilizer O.H. compressor turbine (C)	2	2	31,932	15.97
MP steam turbines				
Condensate to Deaerator pumps	2	2	3,243	1.62
C3 vaporizing Glycol pump	1	1	1,340	1.34
C2 stablg. Compr. Sealoil turbine	3	2	2,532	1.27
Treated water pumps	2	1	1,025	1.02

UNIDO 2012, all rights reserved

- Switch-Over between turbines & motors to optimize steam system losses

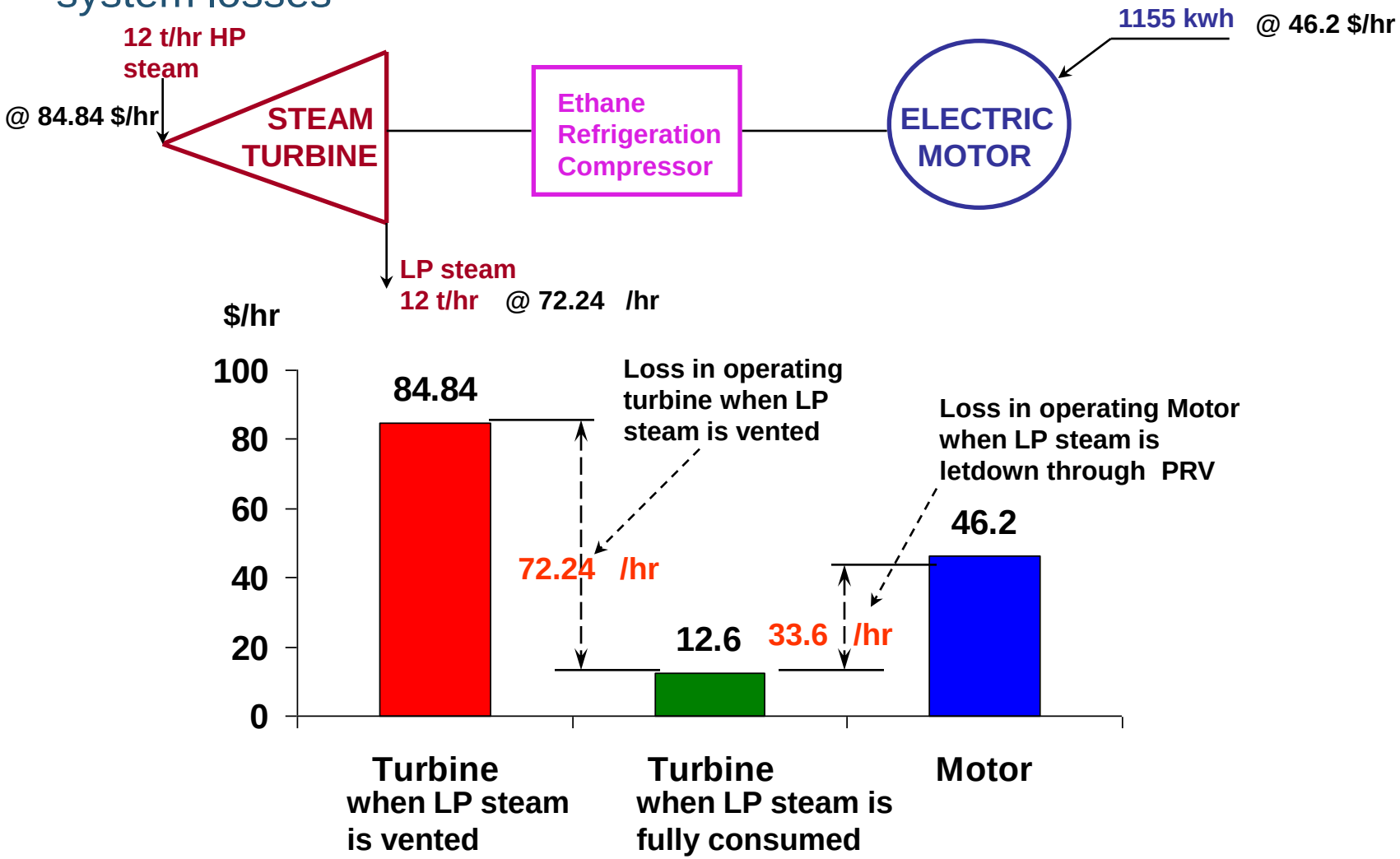

UNIDO 2012, all rights reserved

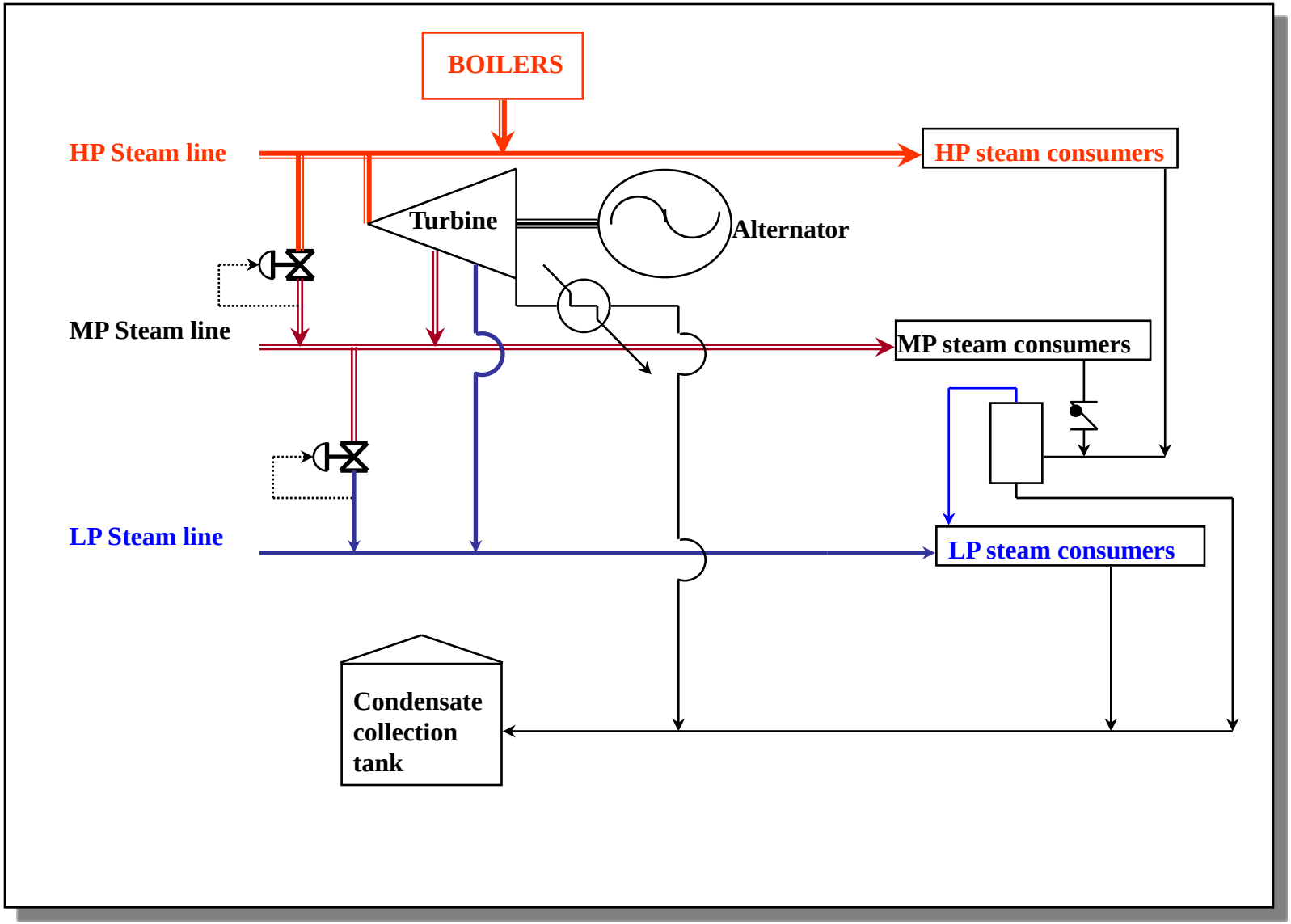

UNIDO 2012, all rights reserved

Case Study – Refinery 1

- **Conclusions**
  - Refinery's Steam system has the flexibility to achieve Optimized Steam Balance. It was recommended to take advantage of this flexibility.
  - A priority list of switch-over between electric motors & steam turbines was developed

- **Estimated Benefits**
  - Optimizing steam balance at the refinery will save $30,000 annually

UNIDO 2012, all rights reserved

Case Study – Fertilizer Plant

- **Current Configuration**
  - A single shaft machine at a Nitric Acid plant has 3-Turbine drives, 2-process compressors and a Turbo Alternator to generate electricity
  - The 2nd Turbine drive was driven with LP steam, obtained from the exhaust steam of the 1st HP turbine
  - To generate additional power, LP steam from other sources also was routed to this 2nd LP turbine
  - To match with the LP steam temperature from other sources, the turbine exhaust steam was de-superheated by spraying BF water

UNIDO 2012, all rights reserved

Current Configuration

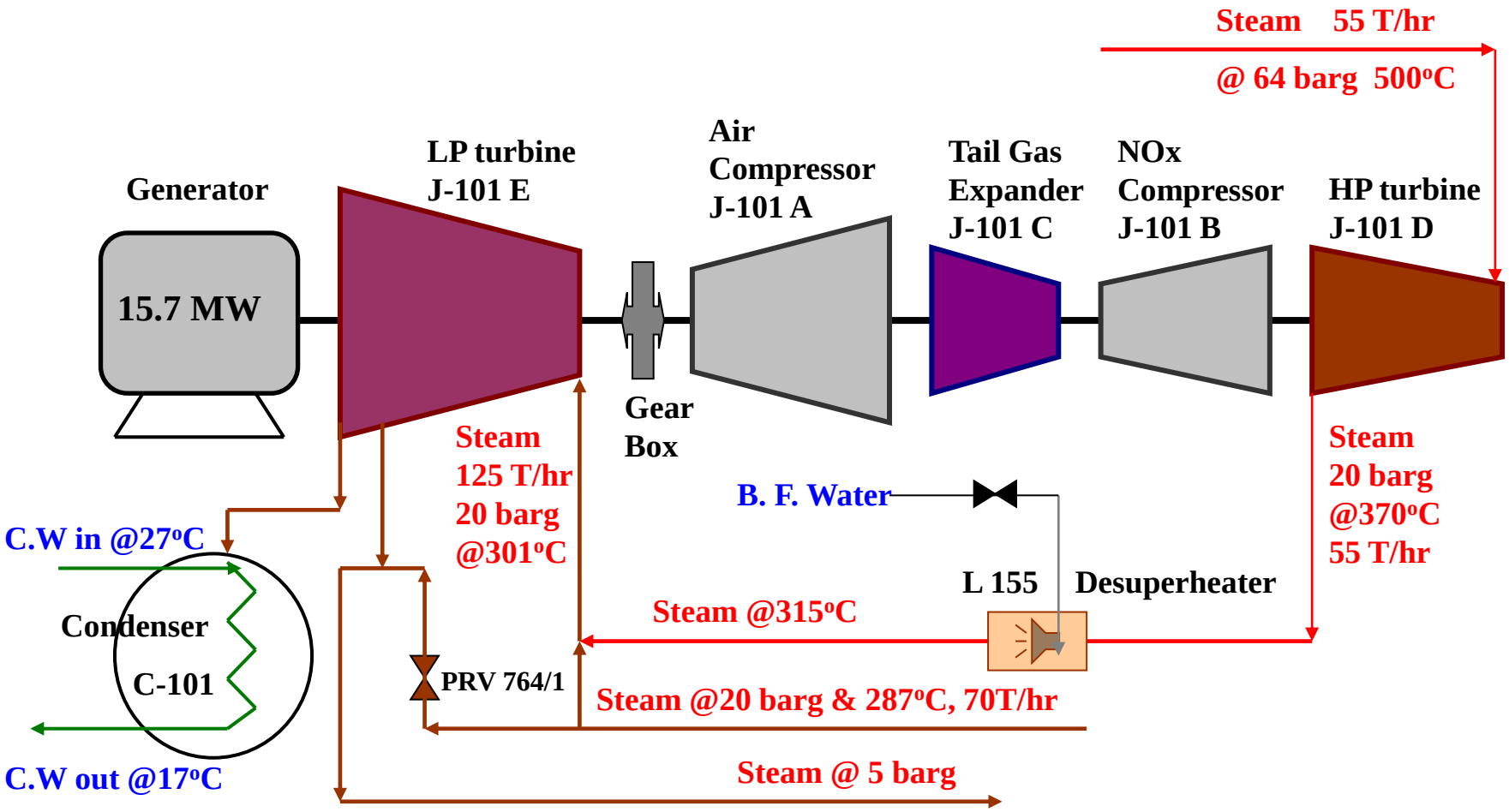

UNIDO 2012, all rights reserved

Case Study – Fertilizer Plant

- **Observed Deficiency**
  - Since Steam turbines achieve better performance with superheated steam, the existing practice of de-superheating unnecessarily reduces the Turbo Alternator's power generation potential
  - Upon verification, the turbine metallurgy could withstand the additional temperature of the superheated steam supply

- **Recommended Action**
  - It was recommended to stop de-superheating of the exhaust steam from the HP turbine, to generate 500kW of additional electricity

UNIDO 2012, all rights reserved

Modified Configuration

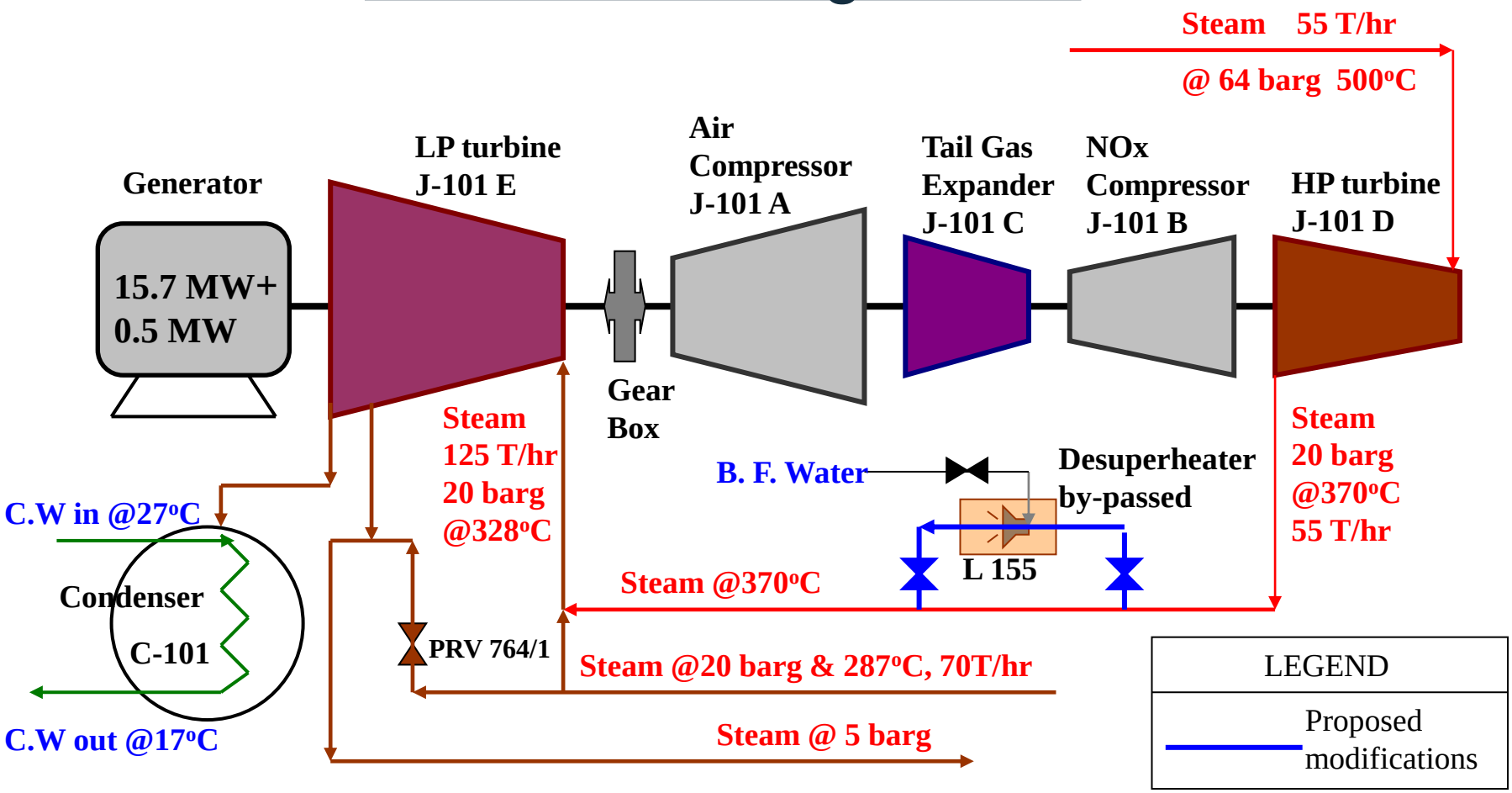

- **Estimated Benefits: Annual purchased electricity cost reduction ~$300,000**

UNIDO 2012, all rights reserved

THIS SLIDE IS NOT TO BE PRINTED

This section of the presentation will need to be developed by the Instructors after visiting the HOST Plant. Two Examples are presented here to help the Instructors develop material on the HOST Plant.

The main intention of this section is to familiarize the Expert candidates with the HOST Plant to enhance the onsite training on Day 4 and 5.

UNIDO 2012, all rights reserved

Industrial Steam System Assessment

Portable Instrumentation & Tools

UNIDO 2012, all rights reserved

THIS SLIDE IS NOT TO BE PRINTED

This section of the presentation is a Hands-On Exercise. It will require at least one complete set of portable instruments to be brought into the classroom. The Instructors are expected to demonstrate the use of each of the instruments to the Expert candidates. The students are expected to get familiar with the instruments – touch screen menus, operations, etc. so that they can use them effectively in the Host Plant on Day 4 and 5.

UNIDO 2012, all rights reserved

Industrial Steam System Assessment

- Portable Instrumentation to be used for the steam system energy assessment
  - Infra-red thermographic camera
  - Combustion flue-gas analyzer
  - IR temperature guns
  - Thermometers with k-type probes
  - Pitot tube with digital manometer
  - Pressure gages
  - Digital camera
  - Stop watch

UNIDO 2012, all rights reserved

Other Tools & Resources

UNIDO 2012, all rights reserved

Tools

- In order to properly evaluate steam systems the physics of each process must be understood
  - Thermodynamics
  - Heat transfer
  - Fluid flow
- US DOE Tools Suite
  - Steam System Survey Guide
  - Steam System Scoping Tool (SSST)
  - Steam System Assessment Tool (SSAT)
  - Insulation evaluation software – 3E-Plus
- Several other commercially available software tools for steam systems
- Process measurements

UNIDO 2012, all rights reserved

Where to Download the Tools

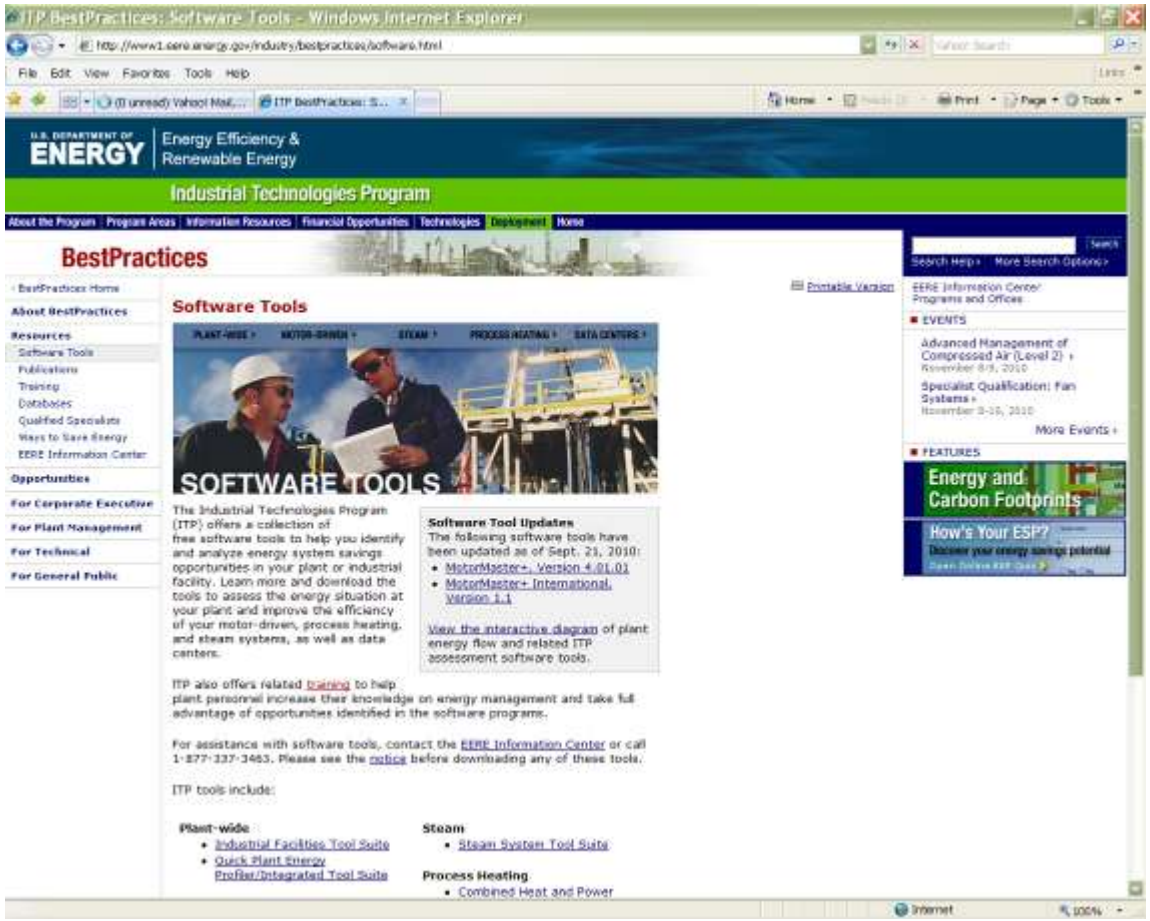

US DOE website -http://www1.eere.energy.gov/industry/bestpractices/software.html

UNIDO 2012, all rights reserved

Technical Publications & Resources

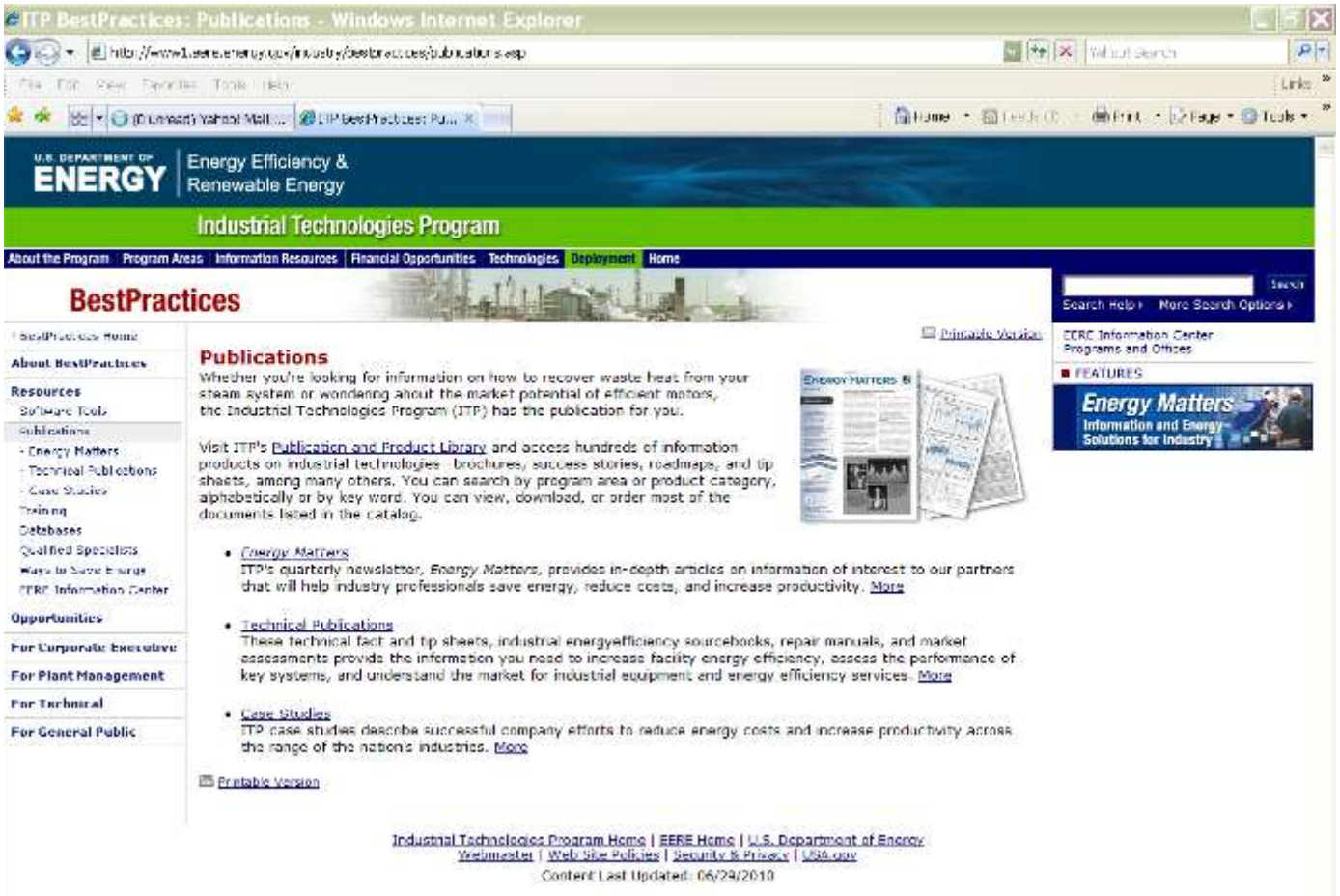

http://www1.eere.energy.gov/industry/bestpractices/publications.asp

UNIDO 2012, all rights reserved

Steam System Survey Guide

- Technical Guide

- Covers 5 Areas:
  - Steam system profiling
  - Identifying steam properties
  - Improving boiler operations
  - Improving resource utilization
  - Improving steam distribution

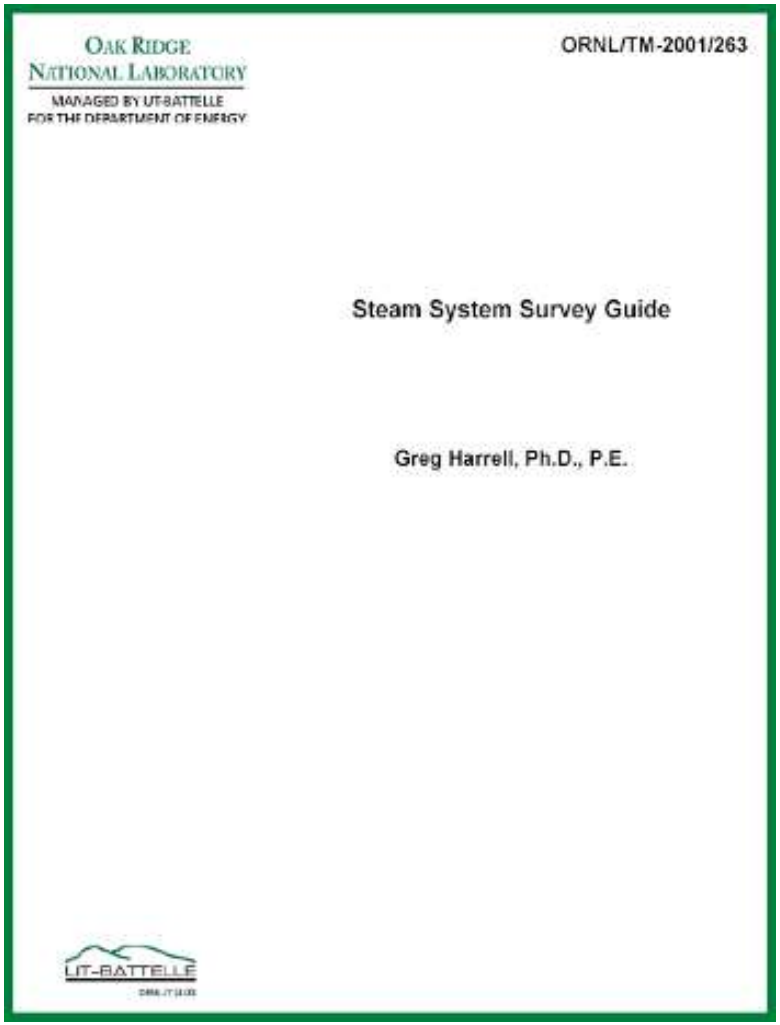
OAK RIDGE NATIONAL LABORATORY
MANAGED BY UT-BATTELLE FOR THE DEPARTMENT OF ENERGY

ORNL/TM-2001/263

Steam System Survey Guide

Greg Harrell, Ph.D., P.E.

UT-BATTELLE

UNIDO 2012, all rights reserved

Steam System Sourcebook

- Includes Three Main Sections:
  - Steam System Basics
  - Performance Improvement Opportunities
  - Programs, Contacts, and Resources

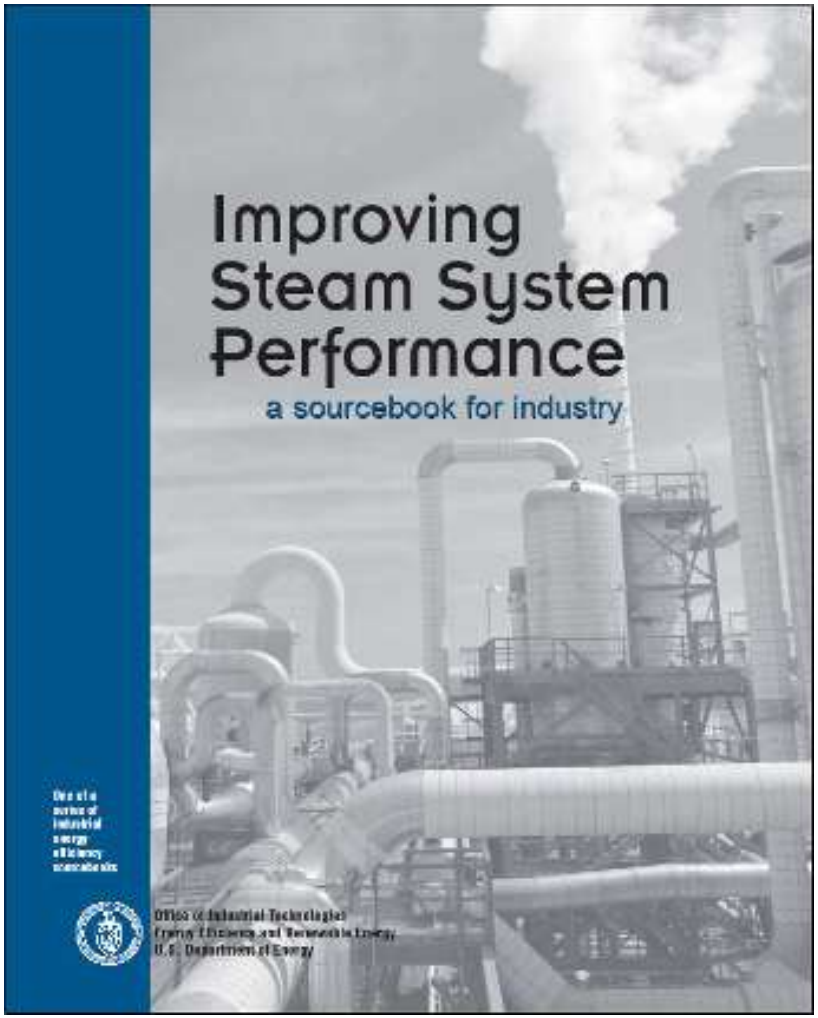

UNIDO 2012, all rights reserved

Steam Energy Tips

- 1- Page Tips For Improving Steam System Areas
- Available On BestPractices Web Site and in Steam Sourcebook

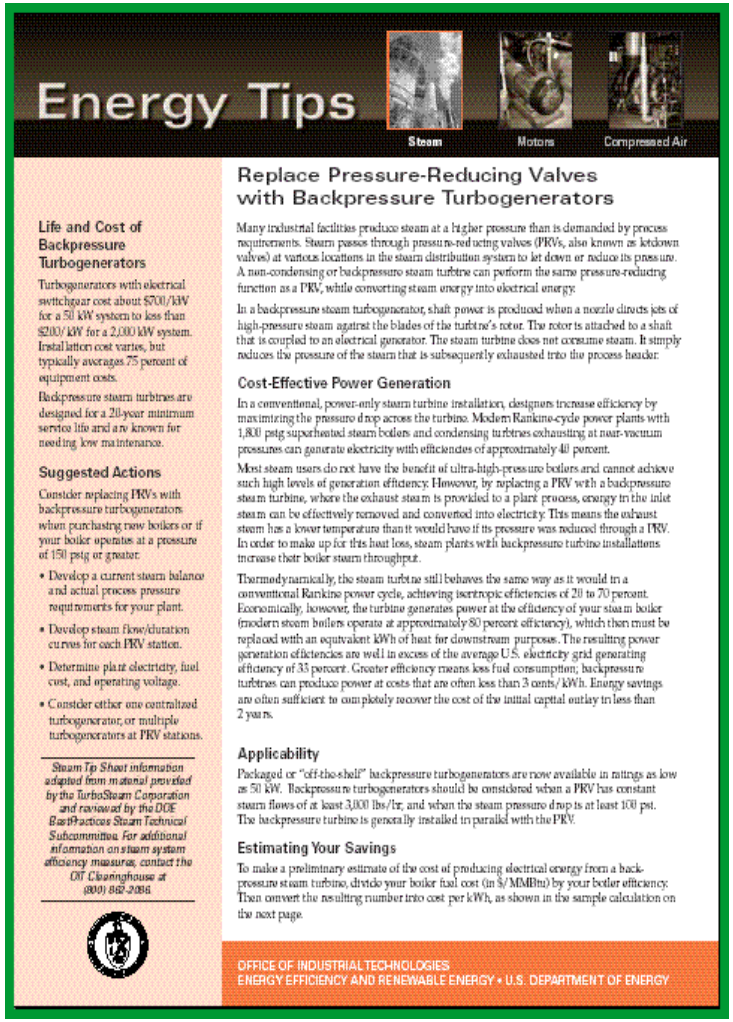

Energy Tips

Steam | Motors | Compressed Air

Replace Pressure-Reducing Valves with Backpressure Turbogenerators

Many industrial facilities produce steam at a higher pressure than is demanded by process requirements. Steam passes through pressure-reducing valves (PRVs, also known as letdown valves) at various locations in the steam distribution system to let down or reduce its pressure. A non-condensing or backpressure steam turbine can perform the same pressure-reducing function as a PRV, while converting steam energy into electrical energy.

In a backpressure steam turbogenerator, shaft power is produced when a nozzle directs jets of high-pressure steam against the blades of the turbine's rotor. The rotor is attached to a shaft that is coupled to an electrical generator. The steam turbine does not consume steam. It simply reduces the pressure of the steam that is subsequently exhausted into the process header.

Cost-Effective Power Generation

In a conventional, power-only steam turbine installation, designers increase efficiency by maximizing the pressure drop across the turbine. Modern Rankine-cycle power plants with 1,800 psig superheated steam boilers and condensing turbines exhausting at near-vacuum pressures can generate electricity with efficiencies of approximately 40 percent.

Most steam users do not have the benefit of ultra-high-pressure boilers and cannot achieve such high levels of generation efficiency. However, by replacing a PRV with a backpressure steam turbine, where the exhaust steam is provided to a plant process, energy in the inlet steam can be effectively removed and converted into electricity. This means the exhaust steam has a lower temperature than it would have if its pressure was reduced through a PRV. In order to make up for this heat loss, steam plants with backpressure turbine installations increase their boiler steam throughput.

Thermodynamically, the steam turbine still behaves the same way as it would in a conventional Rankine power cycle, achieving isentropic efficiencies of 20 to 70 percent. Economically, however, the turbine generates power at the efficiency of your steam boiler (modern steam boilers operate at approximately 80 percent efficiency), which then must be replaced with an equivalent kWh of heat for downstream purposes. The resulting power generation efficiencies are well in excess of the average U.S. electricity grid generating efficiency of 33 percent. Greater efficiency means less fuel consumption; backpressure turbines can produce power at costs that are often less than 3 cents/kWh. Energy savings are often sufficient to completely recover the cost of the initial capital outlay in less than 2 years.

Applicability

Packaged or "off-the-shelf" backpressure turbogenerators are now available in ratings as low as 50 kW. Backpressure turbogenerators should be considered when a PRV has constant steam flows of at least 3,000 lbs/hr, and when the steam pressure drop is at least 100 psi. The backpressure turbine is generally installed in parallel with the PRV.

Estimating Your Savings

To make a preliminary estimate of the cost of producing electrical energy from a back-pressure steam turbine, divide your boiler fuel cost (in $/MMBtu) by your boiler efficiency. Then convert the resulting number into cost per kWh, as shown in the sample calculation on the next page.

Life and Cost of Backpressure Turbogenerators

Turbogenerators with electrical switchgear cost about $700/kW for a 50 kW system to less than $200/kW for a 2,000 kW system. Installation cost varies, but typically averages 75 percent of equipment costs.

Backpressure steam turbines are designed for a 20-year minimum service life and are known for needing low maintenance.

Suggested Actions

Consider replacing PRVs with backpressure turbogenerators when purchasing new boilers or if your boiler operates at a pressure of 150 psig or greater.

- Develop a current steam balance and actual process pressure requirements for your plant.
- Develop steam flow/duration curves for each PRV station.
- Determine plant electricity, fuel cost, and operating voltage.
- Consider either one centralized turbogenerator, or multiple turbogenerators at PRV stations.

Steam Tip Sheet information adapted from material provided by the TurboSteam Corporation and reviewed by the DOE BestPractices Steam Technical Subcommittee. For additional information on steam system efficiency measures, contact the OIT Clearinghouse at (800) 862-2086.

OFFICE OF INDUSTRIAL TECHNOLOGIES
ENERGY EFFICIENCY AND RENEWABLE ENERGY • U.S. DEPARTMENT OF ENERGY

UNIDO 2012, all rights reserved

US DOE Tip Sheets

- Benchmark the Fuel Cost of Steam Generation
- Clean Boiler Water-side Heat Transfer Surfaces
- Consider Installing a Condensing Economizer
- Consider Installing High-Pressure Boilers with Backpressure Turbine-Generators
- Consider Installing Turbulators on Two- and Three-Pass Firetube Boilers
- Consider Steam Turbine Drives for Rotating Equipment
- Considerations When Selecting a Condensing Economizer
- Cover Heated, Open Vessels
- Deaerators in Industrial Steam Systems
- Flash High-Pressure Condensate to Regenerate Low-Pressure Steam
- Inspect and Repair Steam Traps
- Install an Automatic Blowdown Control System
- Install Removable Insulation on Valves and Fittings
- Insulate Steam Distribution and Condensate Return Lines

UNIDO 2012, all rights reserved

US DOE Tip Sheets

- Improve Your Boiler's Combustion Efficiency
- Minimize Boiler Blowdown
- Minimize Boiler Short Cycling Losses
- Recover Heat from Boiler Blowdown
- Replace Pressure-Reducing Valves with Backpressure Turbogenerators
- Return Condensate to the Boiler
- Upgrade Boilers with Energy-Efficient Burners
- Use Feedwater Economizers for Waste Heat Recovery
- Use Low Grade Waste Steam to Power Absorption Chillers
- Use Steam Jet Ejectors or Thermocompressors to Reduce Venting of Low-Pressure Steam
- Use Vapor Recompression to Recover Low-Pressure Waste Steam
- Use a Vent Condenser to Recover Flash Steam Energy

UNIDO 2012, all rights reserved

US DOE Technical Documents

- Improving Steam System Performance: A Sourcebook for Industry
- Achieve Steam System Excellence: Industrial Technologies Program BestPractices Steam Overview Fact Sheet
- BestPractices Steam Technical Brief: Steam Pressure Reduction-Opportunities and Issues
- BestPractices Steam Technical Brief: How to Calculate the True Cost of Steam
- BestPractices Steam Technical Brief: Industrial Heat Pumps for Steam and Fuel Savings
- BestPractices Steam Technical Brief: Industrial Steam System Heat-Transfer Solutions

UNIDO 2012, all rights reserved

US DOE Technical Documents

- BestPractices Steam Technical Brief: Industrial Steam System Process-Control Schemes
- Guide to Combined Heat and Power Systems for Boiler Owners and Operators
- Guide to Low-Emission Boiler and Combustion Equipment Selection
- Review of Orifice Plate Steam Traps
- Save Energy Now in Your Steam Systems
- Steam Digest: Volume IV (2003)
- Steam Digest 2002
- Steam Digest 2001
- Steam Systems Energy Efficiency Handbook
- Steam Systems Survey Guide

UNIDO 2012, all rights reserved

Course Evaluation & Feedback

Your input is greatly appreciated and it will be acted upon to refine this training program as well as better tailor further complementary technical assistance to be offered by the UNIDO project to enterprises.

THANK YOU !

UNIDO 2012, all rights reserved