Industrial Steam System Optimization

Experts Training

Developed by:

Riyaz Papar, P.E., CEM

Hudson Technologies Company, USA

Greg Harrell, Ph.D., P.E.

Energy Management Services, USA
Ven Venkatesan, P.E., CEM
Hudson Technologies Company, USA

UNIDO 2012, all rights reserved

Acknowledgments

- UNIDO Team – Vienna, Austria
- UNIDO Team – South Africa
- United States Department of Energy – USA
- Oak Ridge National Laboratory – USA

UNIDO 2012, all rights reserved

Riyaz Papar, P.E., CEM

- Education
  - **M.S. (Mechanical Engineering), University of Maryland, College Park**
  - **B.Tech. (Mechanical Engineering), Indian Institute of Technology, Mumbai**

- Professional Experience
  - **Director - Energy & Carbon Services, Hudson Technologies**
    - Performance Monitoring & Optimization of Energy Systems
  - **Energy Consultant**
    - Industrial Steam systems, Refrigeration, Chillers & Process Systems, Waste Heat Recovery
    - Chemicals, Petroleum Refining, Food, Pulp & Paper – Manufacturing Sector
  - **Development Manager, Enron Energy Services**
    - Lead on Project Development for Industrial Clients
  - **Principal Research Associate, Lawrence Berkeley National Laboratory**
    - Development of Tools & Resources, Technical Support to US DOE BestPractices
  - **Senior Project Engineer, Energy Concepts Company**
    - Industrial Ammonia-Water Waste heat-fired refrigeration systems

UNIDO 2012, all rights reserved

Riyaz Papar, P.E., CEM

- Other Qualifications & Affiliations
  - **Professional Engineer, State of Maryland, USA**
  - **Certified Energy Manager**
  - **US DOE Steam BestPractices Lead Instructor & Technical Advisor**
  - **US DOE Steam Energy Expert**
  - **UNIDO Energy Expert – Steam, Refrigeration & Chillers and Waste Heat Recovery**
  - **IFC Energy Expert for the Cleaner Production Team**
  - **Chair, ASME Process Industries Division, 2003-04**
  - **Chair, ASHRAE Technical Committee 8.2: Centrifugal Machines, 2009-10**
  - **Chair, ASHRAE Technical Committee 1.10: Cogeneration Systems, 2010-11**

UNIDO 2012, all rights reserved

Greg Harrell, Ph.D., P.E.

- Education
  - **Ph.D. Mechanical Engineering-Thermodynamics, Virginia Tech (VPI&SU) – 1997**
- Professional Experience
  - **1987 to 1993 - Design Engineer, Utilities Process Engineer, BASF Corp.**
    - Oversight for engineering, technical activities of entire utilities department (steam production, electric power generation, compressed air systems, industrial refrigeration facilities, industrial HVAC systems, water filtration facilities and wastewater treatment plant
  - **At Virginia Tech – Mechanical Engineering Professor, Energy Management Institute (EMI)**
    - From 1997 to 2001 - Director of Technical Assistance for EMI
    - Undergraduate and graduate level thermodynamics professor
    - Directly involved in important aspects of energy management for industries located worldwide
    - Has conducted numerous energy surveys for industrial clients throughout the world - on 6 continents, in 22 countries, and in 36 of the United States
    - Developed U.S. DOE Steam End User Training and U.S. DOE Steam Specialist Qualification Training
    - Played major role in development of the USDOE Steam Tools and authored Steam System Survey Guide, which has become a text for university mechanical engineering courses
    - U.S.DOE Compressed Air Challenge Certified Instructor

UNIDO 2012, all rights reserved

Greg Harrell, Ph.D., P.E.

- Professional Experience
  - **Currently – Consultant for Energy Management Services**
    - Primary roles continue to include industrial systems energy analysis and individual process analyses, industrial training courses, university instruction, energy system modeling, and software development
    - A primary instructor in the North Carolina State University Energy Management Diploma Program
    - Major system focus areas - boilers, steam systems, combined heat and power systems (cogeneration), gas turbines, and compressed air systems

UNIDO 2012, all rights reserved

Ven V. Venkatesan, PE, CEM

- Education
  - **M. Tech. (Chemical Engineering), University of Madras, India**
  - **B. Tech. (Chemical Engineering), University of Madras, India.**
  - **Diploma in I.E. (Industrial Engineering), IIIE, Mumbai.**

- Professional Experience
  - **General Manager, VGA Engineering Consultants Inc.**
    - Energy Cost reduction in Process Industries & Steam system reliability improvement
  - **Director-Engineering Services, Armstrong Service Inc. (1996 – 2006)**
    - Engineering services for both its domestic & international operations
  - **Senior Process Engineer, Refineria ISLA (Curazao). (1991 – 1996)**
    - Secretary of its Energy & Loss Steering Committee and an expert in the Combustion
  - **Senior Energy Consultant, M K Raju Consultants (P) Ltd. (1986 – 1991)**
    - Identifying energy cost saving opportunities at all types of major process industries.
  - **Assistant Manager, (Energy & Economy), Bokaro Steel Plant. SAIL (1978 – 1986)**
    - Worked in the fuel efficiency, fuel gas Control, Gas Cleaning plants, Gas Mixing & Boosting stations, Gas Holders & excess Gas Flares.

UNIDO 2012, all rights reserved

Ven V. Venkatesan, PE, CEM

- Other Qualifications & Affiliations
  - **Professional Engineer License, in the States of Florida & Wyoming**
  - **Certified Energy Manager**
  - **Green Building Engineer**
  - **US DOE Steam and Process Heating Energy Expert**
  - **US DOE Process Heating System Expert**

UNIDO 2012, all rights reserved

Contact Information

- Riyaz Papar, P.E., CEM

  Director, Energy & Carbon Services

  Hudson Technologies Company

  USA

  Phone: (281) 298-0975

  E-mail: rpapar@hudsontech.com

- Ven V. Venkatesan, P.E., CEM

  Engineering Manager

  Hudson Technologies Company

  USA

  Phone: (407) 399-9316

  E-mail: vvenkatesan@hudsontech.com

- Greg Harrell, Ph.D., P.E.

  EMSCAS

  USA

  Phone: (865) 719-0173

  Email: gregharrell@emscas.com

UNIDO 2012, all rights reserved

Training Objectives

- To train end-users and consulting engineers in doing steam systems assessments and optimization

- Help industry assess steam systems and achieve energy and cost savings through
  - Proper operation and controls
  - System maintenance
  - Appropriate process uses of steam
  - Cogeneration and
  - Application of state-of-the-art technologies

UNIDO 2012, all rights reserved

General Summary

- To conduct field assessments and identify projects to demonstrate actual energy and cost savings achievable using the systems approach

- Introduce and demonstrate the functionality of US DOE publicly available steam system optimization assessment software tools

UNIDO 2012, all rights reserved

General Summary

- The 5 - day Experts training begins by defining the Systems Approach and how it applies for optimizing an industrial and/or institutional steam system

- The training covers the operation of typical industrial steam systems that include
  - Generation
  - Distribution
  - End-uses and
  - Condensate recovery

UNIDO 2012, all rights reserved

General Summary

- The training identifies *performance improvement opportunities* that lead to the optimization of the overall steam system

- The workshop discusses methods of system efficiency improvements, methodologies for quantifying energy and cost savings from these improvements, aspects of implementation and continuous improvement programs

UNIDO 2012, all rights reserved

General Summary

- Demonstration and hands-on functionality and use of the US DOE's Steam Best Practices Program. These include:
  - Steam System Scoping Tool (SSST)
  - Steam System Assessment Tool (SSAT)
  - 3E-Plus insulation appraisal software
- Software tools are free and available for download from the websites
- Field examples and applications of using these software tools in an industrial steam system energy assessment

UNIDO 2012, all rights reserved

Training Agenda

- Day 1 – 2-day User Steam Training
- Day 2 – 2-day User Steam Training
- Day 3 – Experts Training & Pre-Assessment activities
- Day 4 – Steam System Assessment
- Day 5 – Steam System Assessment

UNIDO 2012, all rights reserved

Training – Outline
Day 1

- Laptop setup for all attendees – software tools and program files
- Presentation on the UNIDO Industrial Energy Efficiency Project
- Introduction to “Systems Approach”
- Review of steam system fundamentals – thermodynamics
- Review of the US DOE Steam System Scoping Tool (SSST)
- Student Exercise – Evaluation of an industrial plant steam system using the SSST and identifying energy savings areas
- Coffee / Tea Break

UNIDO 2012, all rights reserved

Training – Outline
Day 1

- Review of the US DOE's Steam System Assessment Tool (SSAT)
- Utility Costs
  - Power
  - Fuel
  - Water
- Identification of impact boiler – example from industrial plant
- Steam Cost Indicator
- SSAT Quick Start Section

UNIDO 2012, all rights reserved

Training – Outline
Day 1

- Calculation of boiler efficiency using field measurements
- Boiler Losses
  - Shell Loss
  - Blowdown Loss
  - Stack Loss
- SSAT "Site Detail" Section
- Develop a 1-header SSAT steam system Model
- Understanding marginal steam cost
- Lunch Break

UNIDO 2012, all rights reserved

Training – Outline
Day 1

- Blowdown & Flash Steam
- Steam Generation Conditions
- Letdowns / PRVs
- Deaerator
- Heat Recovery Components
- Condensate Recovery
- Distribution Losses
- Marginal Steam Cost Discussion / Comparison
- Coffee / Tea Break

UNIDO 2012, all rights reserved

Training – Outline
Day 1

- Fundamentals of Turbines
- Backpressure Turbines
- Modeling Backpressure Turbines in SSAT
- Hands-On Student Exercises
- Condensing Turbines
- Adjourn

UNIDO 2012, all rights reserved

Training – Outline
Day 2

- Review Day 1 material
- Questions and Answers on material covered on Day 1
- Steam System Optimization – Generation Area
  - Boiler Efficiency Improvement
  - Blowdown Management
  - Blowdown Energy Recovery
  - Feedwater Economizers / Combustion AirPreheaters
  - Excess Air Control
  - Fuel Switching
- Hands-On Student Exercises
- Coffee / Tea Break

UNIDO 2012, all rights reserved

Training – Outline
Day 2

- Steam System Optimization – Distribution Area
  - Steam Leaks
  - Heat Transfer Loss Through Insulation
- Student Exercise – Complete examples on steam leaks and insulation heat loss using the SSAT software tool
- 3E Plus Insulation Evaluation Software
- Steam System Optimization – End-Use Area
  - Steam Generation Condition Impacts
  - Steam Demand (End Use)
- SSAT Steam Demand Savings Projects
- Lunch Break

UNIDO 2012, all rights reserved

Training – Outline
Day 2

- Steam System Optimization – Condensate Recovery Area
  - Steam Trap Management Program
  - Evaluation of Condensate Recovery Systems
  - Condensate Flash Tanks
  - Condensate Tank Vents
- Student Exercise – Complete examples on condensate recovery and condensate flash steam recovery using the SSAT software tool

UNIDO 2012, all rights reserved

Training – Outline
Day 2

- Steam System Optimization – Combined Heat & Power Area
  - BackPressure Turbine – PRV Operations
  - SSAT Turbine Projects Economics
  - Condensing Turbine Impacts
  - SSAT Condensing Turbine Projects
- Coffee / Tea Break
- Conclusions
- Tools & Resources

UNIDO 2012, all rights reserved

Training – Outline
Day 3

- Questions and Answers from Day 1 & 2
- Review of “key” material and concepts
- Student Exercise – Complete an industrial steam system energy assessment using the BestPractices tools and provide a final report to plant management for implementing energy efficiency improvement opportunities in the steam system
  - A full description of the industrial plant steam system will be provided
  - Students will work individually and the instructors will play the roles of the utilities and process engineers of the plant
  - Students will need to use both fundamental concepts and will have to do manual calculations for field observed data
  - Students will also use the SSAT and 3EPlus software tools to quantify steam energy savings opportunities at this plant
- Coffee / Tea Break

UNIDO 2012, all rights reserved

Training – Outline
Day 3

- Energy assessment standard – ASME Steam Standard
- Presentation of select Case Studies from industry in SSO
- HOST Plant Information – Significant information on the plant to be assessed is provided to students
- HOST Plant Projects discussion – Possible projects to be covered
- Lunch Break

UNIDO 2012, all rights reserved

Training – Outline
Day 3

- Instrumentation briefing
- Instrumentation Demo – Demonstration of all the instruments used in an assessment will be given to students
- Coffee / Tea Break
- Conclusions
- Information about additional steam system optimization resources

UNIDO 2012, all rights reserved

Training Outline
Day 4 & 5

- Host Plant SSO Assessment
  - International Experts and national expert trainees visit the Host plant
  - National expert trainees are divided into teams and provided portable instrumentation to be used in the the steam system assessment
  - International experts works w/expert trainees and identifies potential improvement opportunity areas
  - Due-diligence including data gathering is done onsite
  - National expert trainees are given hands-on opportunity and training to do a steam system assessment
  - Report Generation

UNIDO 2012, all rights reserved

Training Outline
Post Assessment

- Next 4 months
  - Candidate Plant
    - Each national expert trainee works with an assigned candidate plant to conduct a steam system optimization energy assessment
    - Works w/international expert to review the assessments, observations, models and results
    - Completes final report and presents to plant
  - Webinars / Phone conferences
    - Technical support and guidance provided by international experts to national expert trainees
  - Ongoing review of expert trainee and their level of SSO understanding

UNIDO 2012, all rights reserved

Training Outline
Post Assessment

- After 4 months
  - ½ Day Review
    - Classroom training to review fundamentals of SSO
    - Functionality and use of steam system tools
    - Questions and Answers
    - Discussion of experiences from Candidate plants
  - Qualifying Exam
    - National expert trainees will take a 4-hour exam as their final qualification test before they are qualified as SSO NATIONAL EXPERT

UNIDO 2012, all rights reserved

Personal Goals

- Introduction of attendees
- Any major issues or concerns as regards the course material, timeline, etc.
- Identification of possible areas which need more in-depth coverage based on the interests of the attendees

UNIDO 2012, all rights reserved

Overview

Overall Energy Usage

Steam Energy Usage

The Systems Approach

Steam System Optimization (SSO)

UNIDO 2012, all rights reserved

Industrial Energy = ½ World's Energy

2004 World Energy Use: 447 Quads

Industry accounts for 50% of world energy use

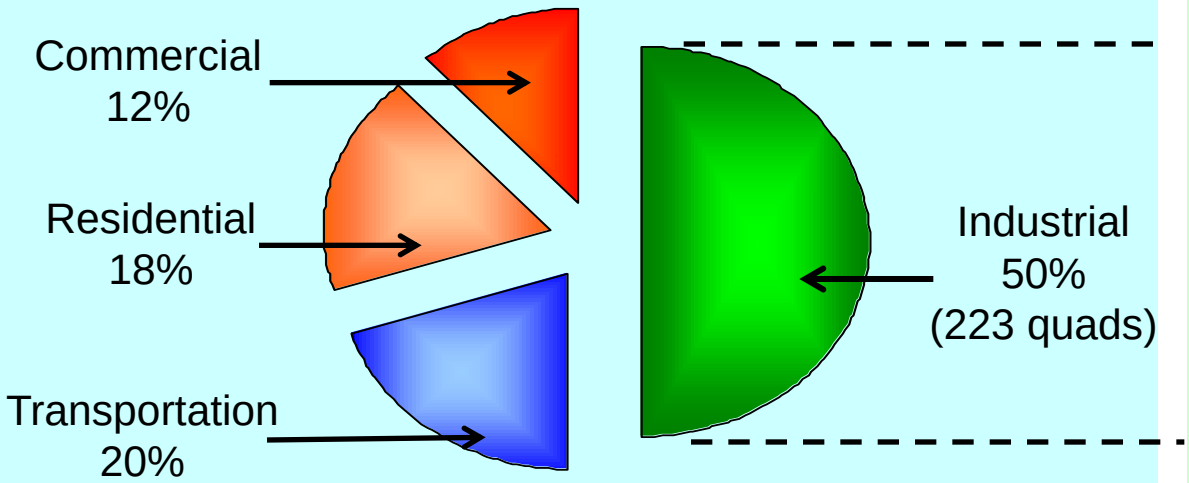

Industry: 223 Quads

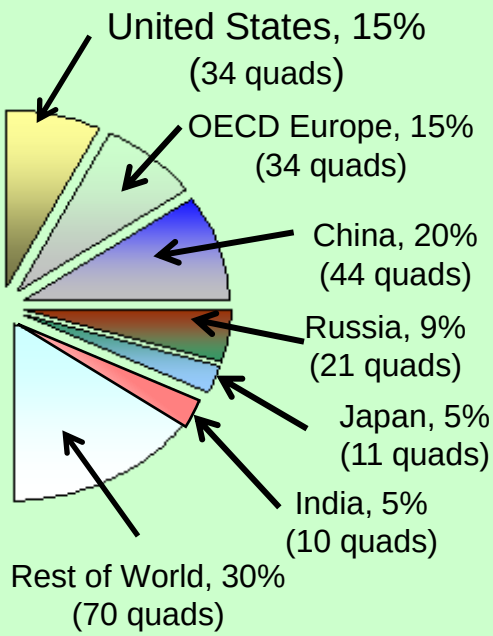

Source: EIA/International Energy Outlook 2007

1 quad Btu = 1.055 EJ

Source: Oak Ridge National Laboratory, USA

UNIDO 2012, all rights reserved

South Africa Primary Energy

- Coal is the dominant source of energy in South Africa
- Coal produces 92% of electricity generated
- Coal is also exported but 95% of crude oil is imported
- Limited reserves of natural gas in South Africa and Industry uses almost 100% of it
- Energy usage and prices expected to increase

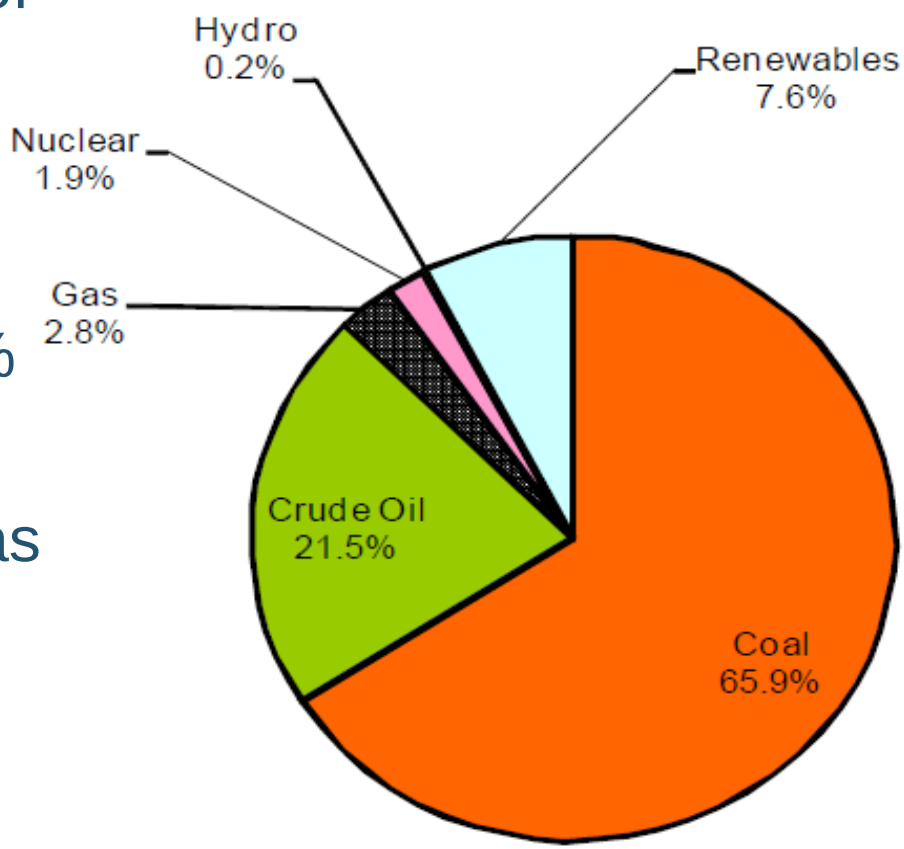

UNIDO 2012, all rights reserved

South African Industrial Energy

- Industry consumes 1/3 of energy
- Energy is key to economic growth and maintaining jobs in manufacturing
- Most of this energy (60%) is probably configured in 5% of the large industrial plants
- Industry should be one of the major focuses for Energy Efficiency programs

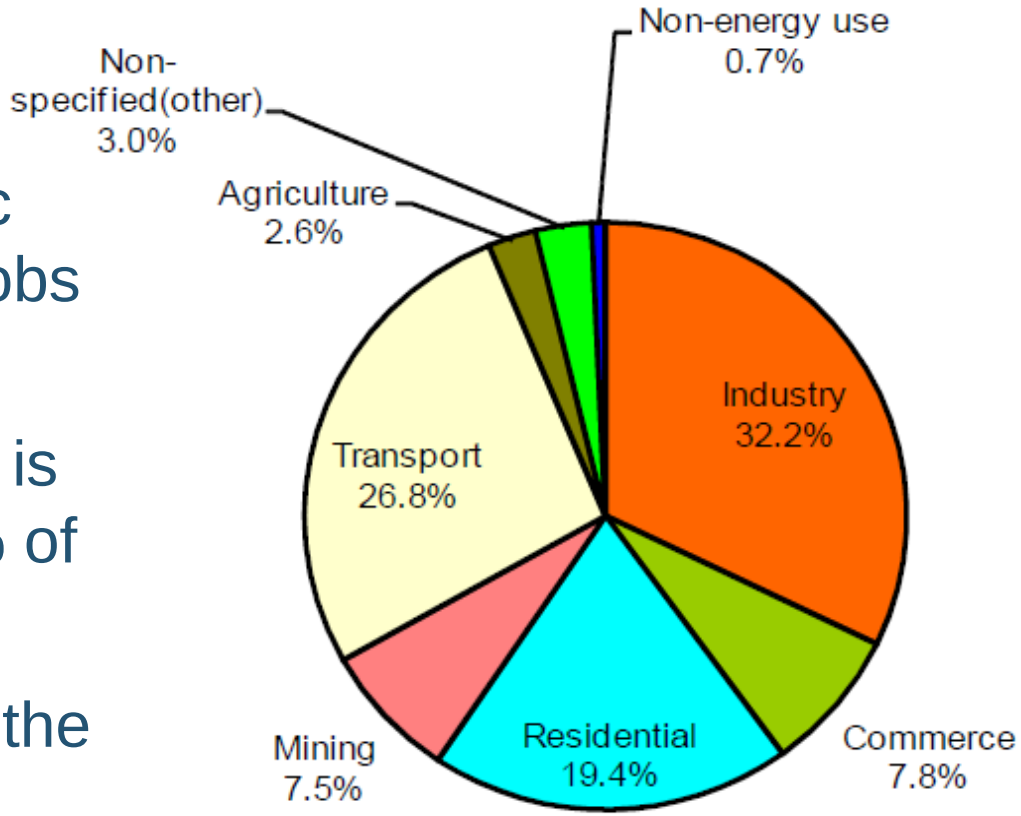

UNIDO 2012, all rights reserved

Typical Industrial Plant Energy Consumption

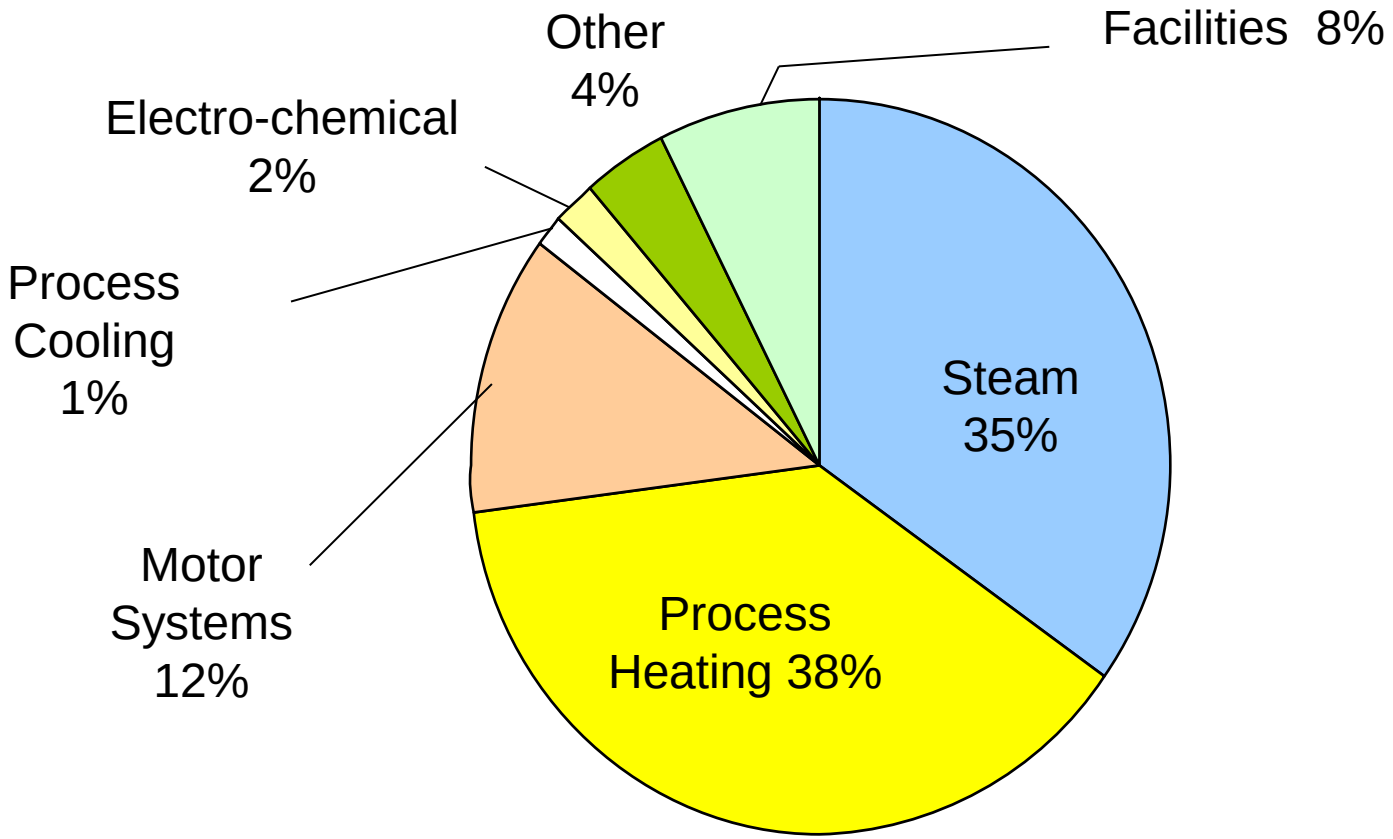

Note: Does not include off-site losses

Source: DOE/EIA Monthly Energy Review 2004 (preliminary)

UNIDO 2012, all rights reserved

Steam Users

- Heavy Steam Users
  - Petrochemicals
  - Petroleum Refining
  - Forest Products (Pulp & Paper)
  - Food & Beverage
  - Plastics
  - Rubber
  - Textiles
  - Pharmaceuticals
  - Manufacturing Assembly

UNIDO 2012, all rights reserved

Steam Users

- Medium Steam Users
  - Large commercial heating
  - Breweries
  - Laundries
  - Bakeries
  - Cooking
  - Metal Fabrication
  - Large chiller systems
- Small Steam Users
  - Electronics
  - Paint booths
  - Humidification systems

UNIDO 2012, all rights reserved

Why Use Steam?

- Extremely efficient as a heating source – constant temperature, highest heat transfer (condensing) coefficients
- Extremely cost effective to distribute to point-of-use
- Can be controlled very accurately
- A very flexible energy transfer medium – can be used for process heating as well as power generation
- Technology and applications are tried and proven at large as well as small-scale
- Significant system benefits!

UNIDO 2012, all rights reserved

The Systems Approach

- Key to cost-effective plant utility system operations and maintenance
- Pay attention to the system as a whole, not just to individual pieces of equipment
- Analyze both the supply and demand sides of systems and how they interact
- Most industrial systems will need a Systems Approach for proper analysis
- Will lead to significantly higher energy and cost savings than a "component level analysis"

UNIDO 2012, all rights reserved

The Systems Approach

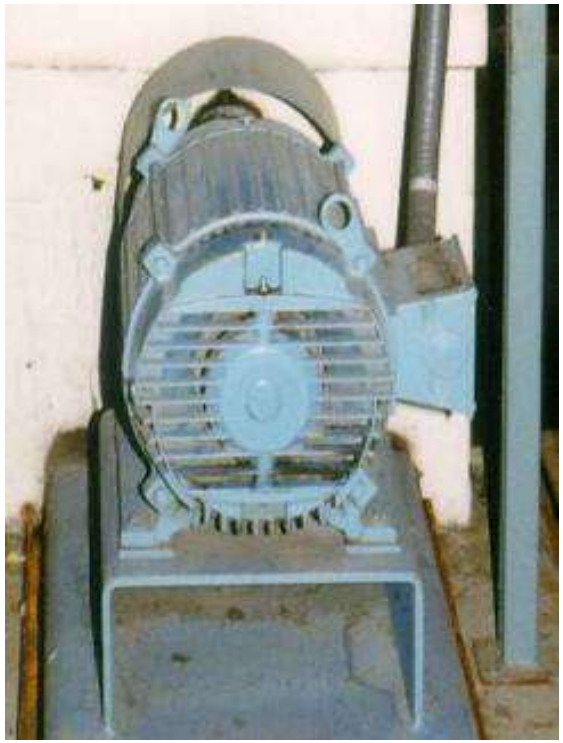

15 kW motor efficiency = 91%

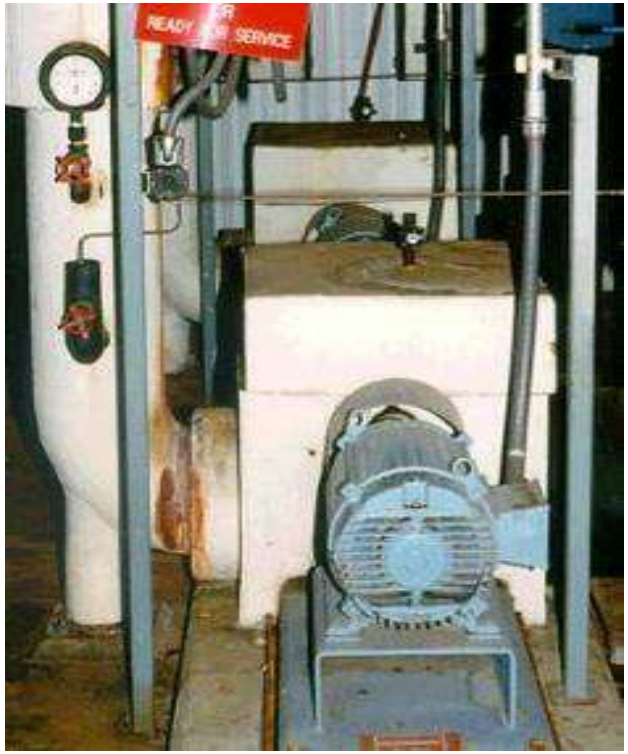

Combined motor & pump efficiency = 59%

System efficiency = 13%

Source: US DOE ITP BestPractices Program; Courtesy: Don Casada, Diagnostic Solutions, USA

UNIDO 2012, all rights reserved

The Systems Approach

- **Establish** current system conditions, operating parameters, and system energy use
- **Investigate** how the total system presently operates
- **Identify** potential areas where system operation can be improved
- **Analyze** the impacts of potential improvements to the plant system
- **Implement** system improvements that meet plant operational and financial criteria
- Continue to **monitor** overall system performance

UNIDO 2012, all rights reserved

Generic Steam System

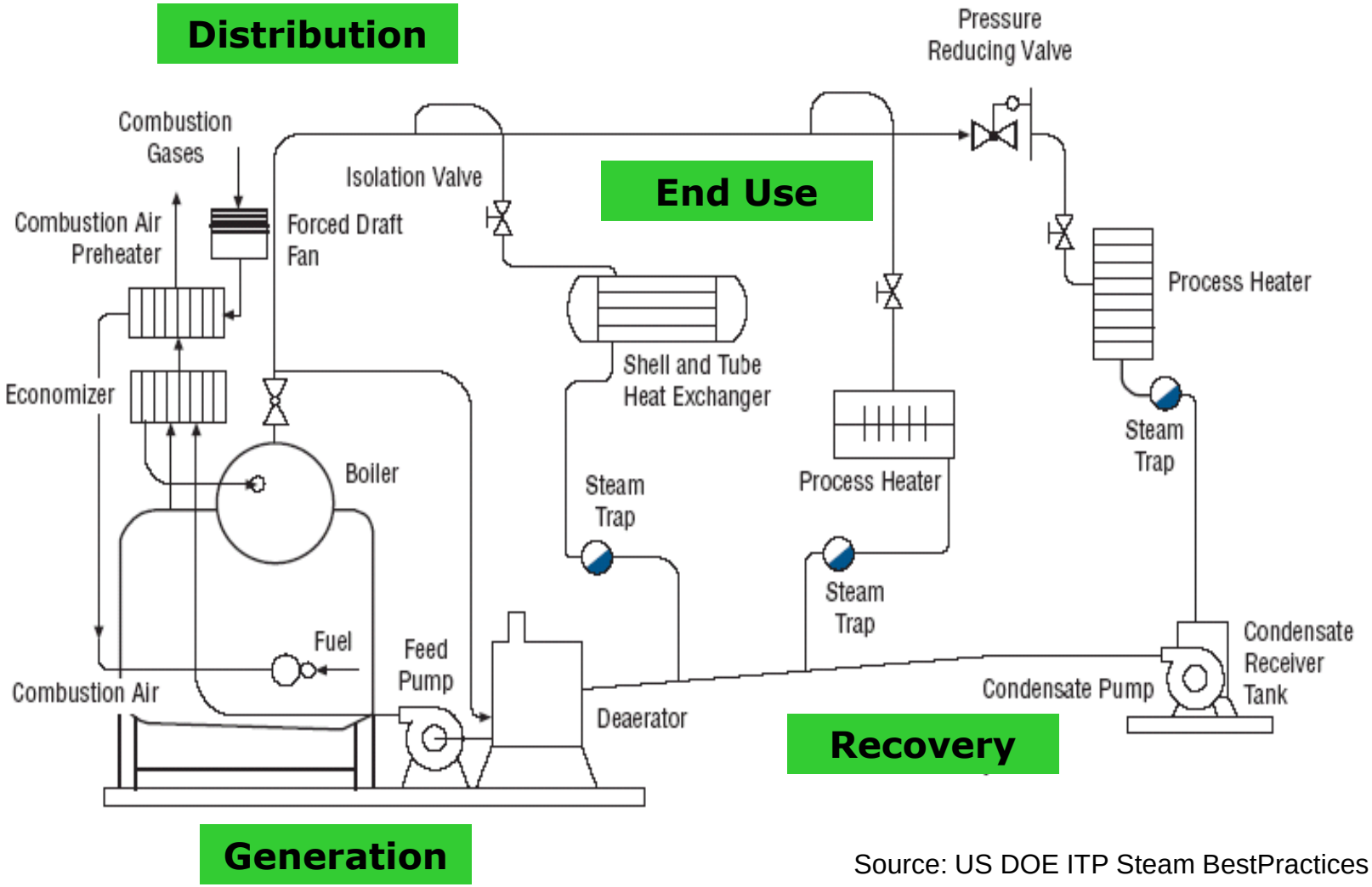

Source: US DOE ITP Steam BestPractices Program

UNIDO 2012, all rights reserved

Industrial Steam System Optimization

- Needs to follow a SYSTEMS Approach
- Focuses on how steam system energy is managed in a plant
- Industrial steam demands change over time and operations of steam system assets should be optimized on a continuous basis
- BestPractices during design, procurement, operations and maintenance must be followed
- Understanding of the fundamentals and tools and resources available is key for a SSO program

UNIDO 2012, all rights reserved

Save Energy Now All Plants Assessed (2006-2010)

Total Plants Assessed:	**nearly 2,445**
Identified Cost Savings:	**$1.4 billion (2,349 reporting)**
Identified Energy Savings:	**200 Peta Joules (source)**
Identified CO_2 Savings:	**11.9 million metric tons**

- **Implemented approximately 1/3 of cost savings**
- **Another 1/3 is in progress and planned**

http://www1.eere.energy.gov/industry/saveenergynow/assessments.html

Source: Oak Ridge National Laboratory, USA

UNIDO 2012, all rights reserved

Identified Savings per Plant Summary (in US)

System Type (No. of SENAs)	Average Recommended Source Energy Savings (GJ/plant per year)	Average Percent Source Energy Savings Recommended (%)	Average Recommended Cost Savings ($/plant per year)	Average Natural Gas Savings Recommended (GJ/plant per year)	Average CO2 Savings Recommended (Tons/plant per year)
Compressed Air (127)	30,800	2.2	$177,000	440	1,700
Fans (40)	206,900	3.1	$1,151,000	38,400	9,000
Process Heating (213)	246,300	11.2	$1,582,000	187,400	13,300
Pumps (80)	42,400	1.2	$219,000	1,250	2,400
Steam (313)	270,100	7.0	$2,075,000	220,000	18,000
Multi-System-Paper (20)	420,200	4.7	$2,782,000	217,900	21,000

Source: Oak Ridge National Laboratory, USA

UNIDO 2012, all rights reserved

Steam System Fundamentals

Steam System Components

Thermodynamics – Steam Properties

Conservation of Mass

Conservation of Energy

Fuels

Steam System Optimization Opportunities

UNIDO 2012, all rights reserved

Steam System Components

- Generation
  - Boiler
  - Boiler auxiliaries
  - Water treatment equipment
  - Deaerator
  - Feedwater Pumps
  - Fuel storage and handling equipment
- Distribution
  - Steam piping
  - Pressure reducing stations
- End-use
  - Steam turbines
  - Heat exchangers
  - Live steam injection
  - Stripping columns
  - Evaporators, etc.
- Recovery
  - Steam traps
  - Condensate recovery and return system
  - Condensate pumps

UNIDO 2012, all rights reserved

Fire-Tube Boiler

- Steam pressure limited
  - Typical 20 bars maximum
- Steam flow rate limited
  - Typical 1,200 BHp maximum
  - 20 tons/hr
- Saturated steam output
- One inherent efficiency advantage over water tube type – shell loss is minimal
- Generally manufactured offsite
- Many different styles

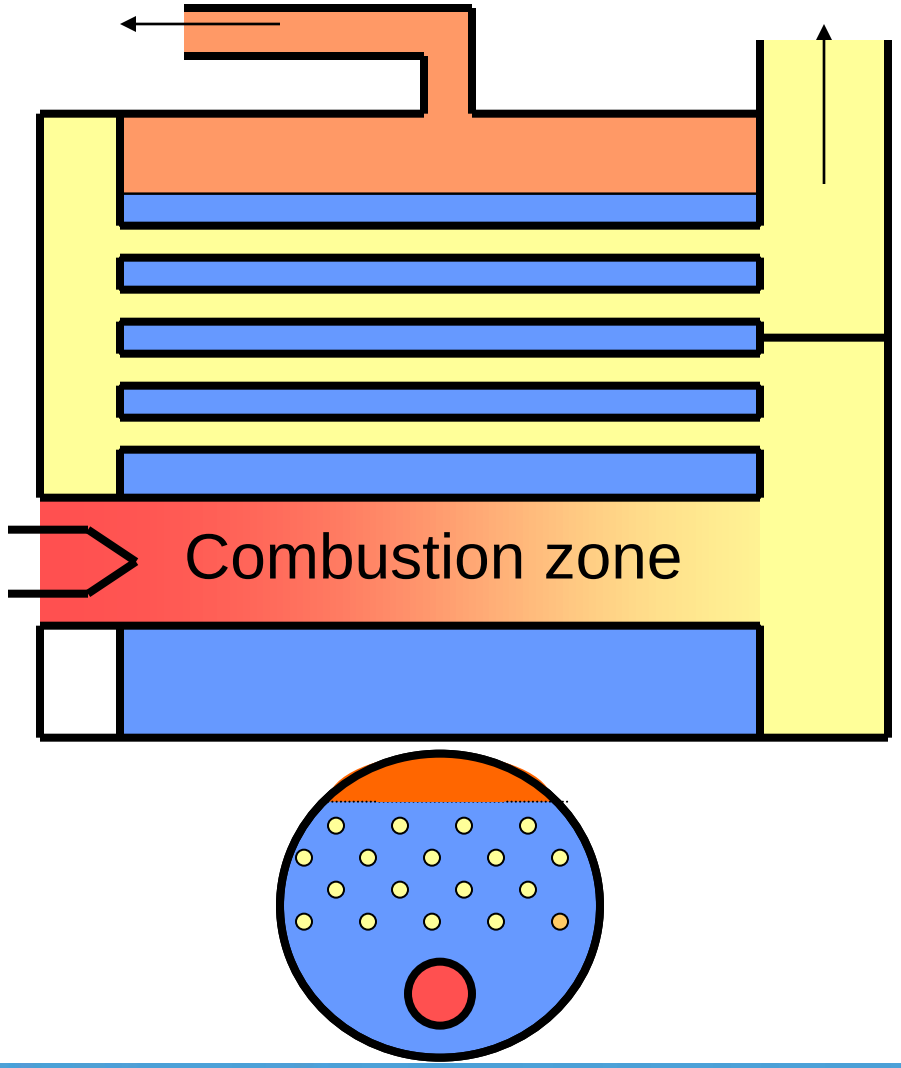

Source: US DOE ITP Steam BestPractices Program

UNIDO 2012, all rights reserved

Fire Tube Boilers

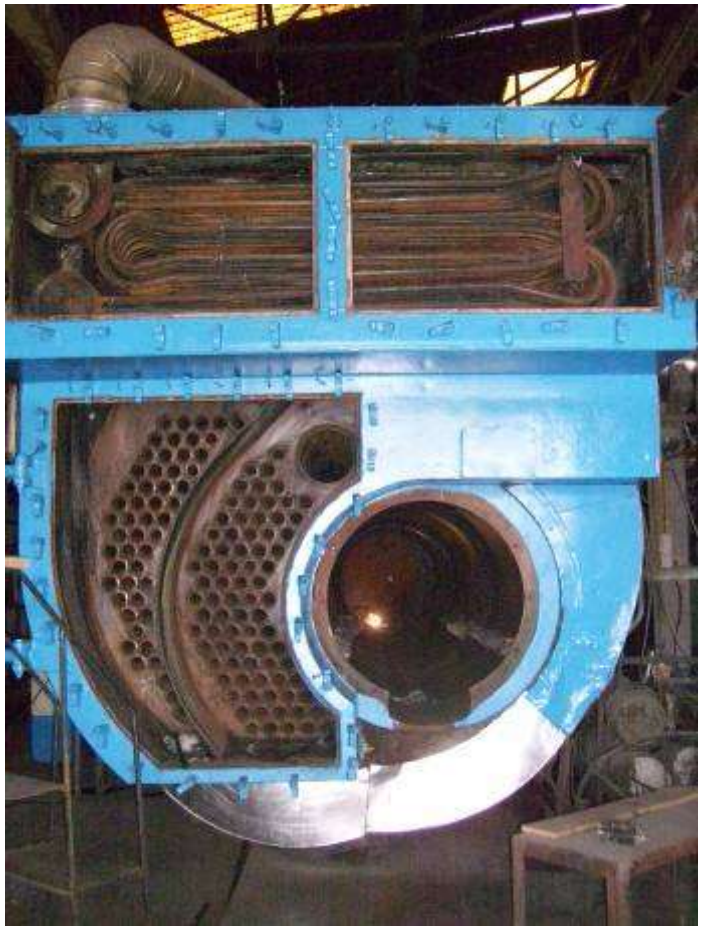

UNIDO 2012, all rights reserved

Water-Tube Boiler

- Operating pressures range from atmospheric to in excess of 250 bars
- Steam production ranges from 2 Tph to 5,000 Tph
- Saturated or superheated steam output
- Constructed onsite or offsite
- Many different styles
- Compact units now on the market!

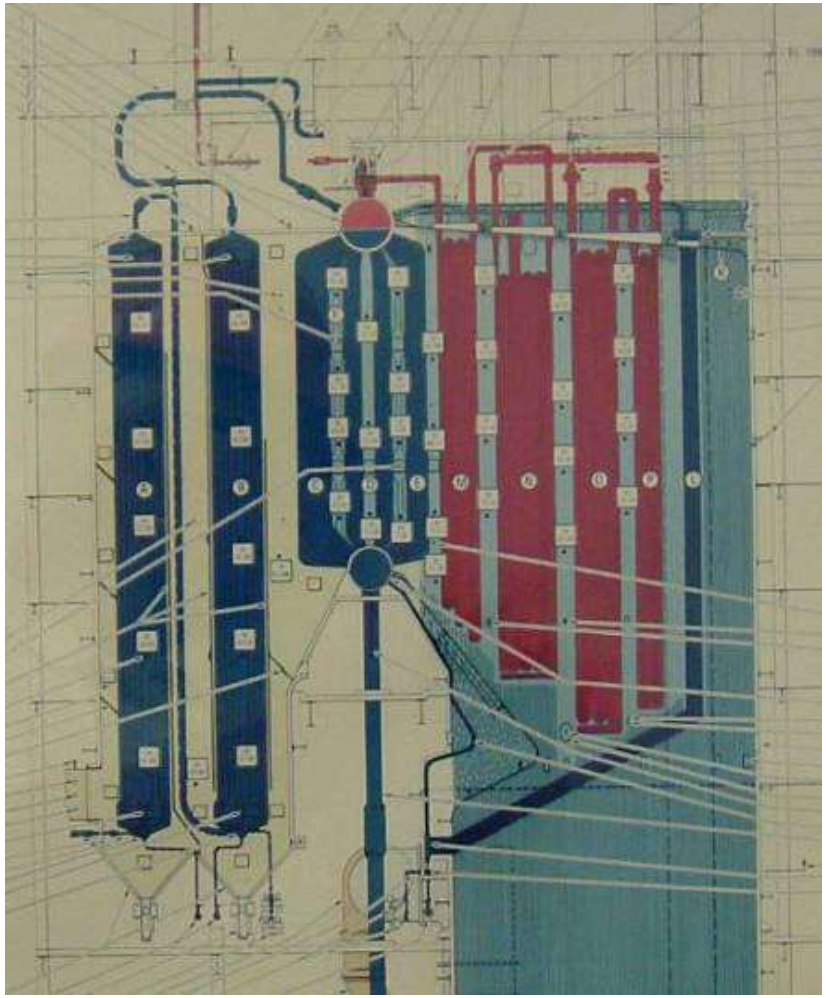

Source: US DOE ITP Steam BestPractices Program

UNIDO 2012, all rights reserved

Water Tube Boilers

UNIDO 2012, all rights reserved

Boilers & Boiler Auxiliaries

- Two main boiler types
  - Fire-tube
  - Water-tube
- Fans - Air flow configuration
  - Forced draft
  - Induced draft
  - Balanced draft
- Combustion air pre-heaters
- Feedwater economizers / condensing economizers
- Fuel flow valves and combustion controls
- Excess air controls
- Sensors
- Soot blowers – steam or compressed air
- Pollution control equipment

UNIDO 2012, all rights reserved

Fuel Storage & Handling Equipment

- Mainly for solid and liquid fuels
  - Primary
  - Back-up / Standby

UNIDO 2012, all rights reserved

Deaerator

- Removes dissolved oxygen from make-up water and condensate
- Boiler integrity
- Several different styles
  - Spray type
  - Tray type
- Maybe combined with feedwater heater and storage
- Will always have a steam vent!

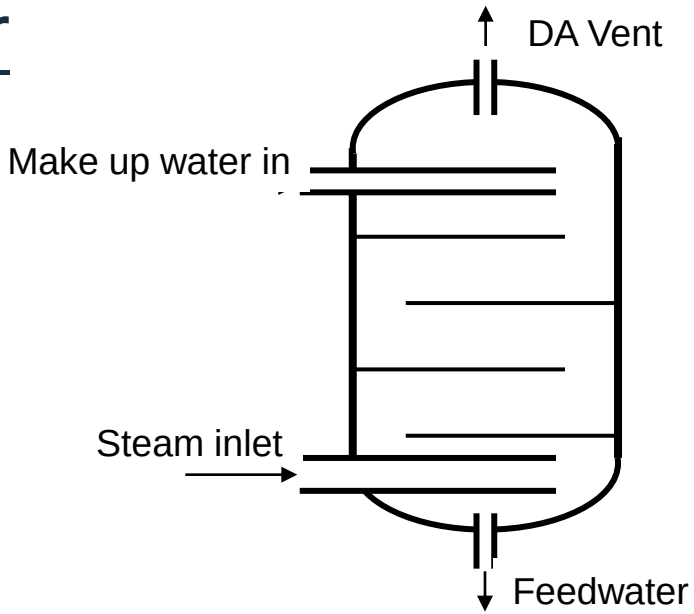

UNIDO 2012, all rights reserved

Pumps

- Boiler Feedwater (BFW)
- Condensate
- Make-up water
- Other auxiliary services

UNIDO 2012, all rights reserved

Water Treatment Equipment

- Extremely important boiler water chemistry
- Integrity of boiler
- Depends on boiler pressure and water quality
- Several options
  - Softening
  - Dealkalization
  - Demineralization
  - Reverse osmosis
  - Condensate polishing
  - Chemical treatment

UNIDO 2012, all rights reserved

Steam Piping

- Transports steam to end use
- Pipe racks
- Pressure headers
- Isolation valves
- Relief valves
- Drain points, etc

UNIDO 2012, all rights reserved

Pressure Reducing Stations

- Also known as Letdown valves
- Provide steam flow control
- Provide pressure header balancing
- Operates on a feedback loop
- Always need a bypass for emergency and repair conditions

UNIDO 2012, all rights reserved

Steam Turbines

- Devices which convert thermal energy into shaft power
- Can generate electrical power through a generator
- Can drive a mechanical equipment – fan, pump, compressor, chiller, etc.
- Different types
  - Backpressure
  - Extraction
  - Condensing
  - Combination of the above

UNIDO 2012, all rights reserved

Heat Exchangers

- Different types
  - Shell & Tube
  - Plate / Frame
  - Tube in tube
  - Spiral, etc.
- Based on applications
- Steam transfers thermal energy to process fluid and forms condensate
- Industry standards for designs and applications

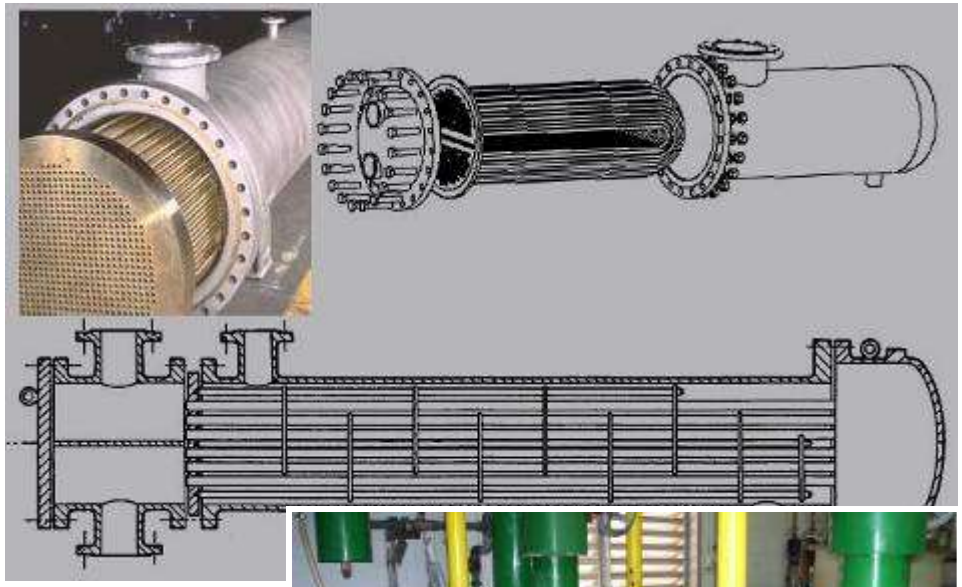

UNIDO 2012, all rights reserved

Other End Use Equipment

UNIDO 2012, all rights reserved

Other End Use Equipment

- Distillation tower
  - Stripping column
- Reformers
- Separators

- Steam ejectors
- Steam injectors
- Thermocompressors

UNIDO 2012, all rights reserved

Steam Traps

- Prevent steam from escaping without transfer of heat
- Several different types of traps
  - Thermostatic
  - Mechanical
  - Thermodynamic
  - Orifice
- Application – very important
- Steam Trap Management

UNIDO 2012, all rights reserved

Flash Tanks

- Recover flash steam from condensate
- Eliminate potential condensate return problems
  - Water hammer
  - Back-pressure
  - 2-phase flow
- Blowdown flash tanks reduce temperature of water before discharging to sewer

UNIDO 2012, all rights reserved

Condensate Recovery System

- Primary / Secondary
- Pumped / Pressure-driven
- Pumped – Electric-driven or Steam-driven
- Returns condensate back with the highest thermal energy to the boiler house

UNIDO 2012, all rights reserved

Condensate Tank

- Provides for a common receiver
- Typically, located above grade to provide for pump suction requirements
- May be combined with deaerator and feedwater heater and storage

UNIDO 2012, all rights reserved

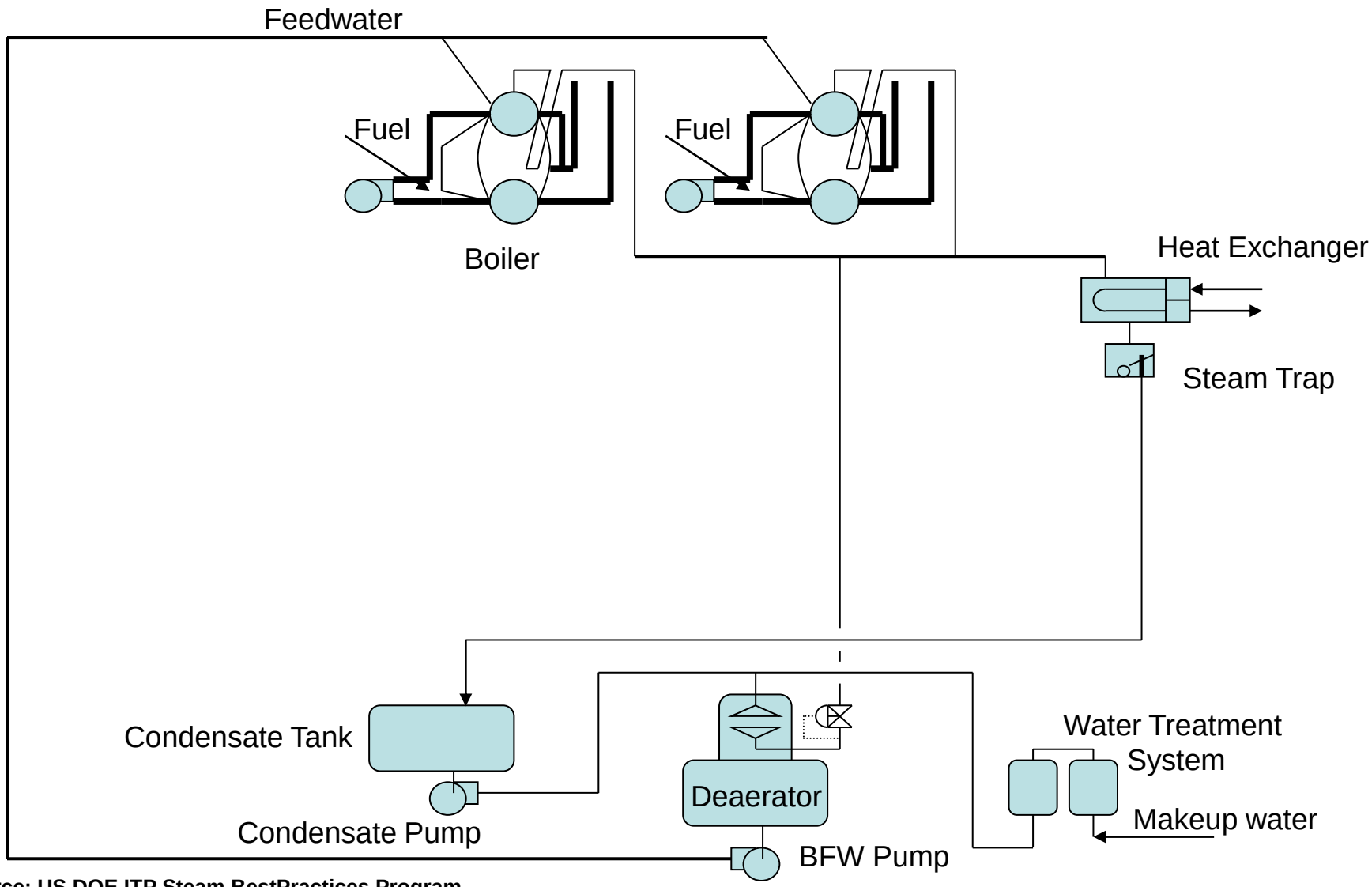

Source: US DOE ITP Steam BestPractices Program

UNIDO 2012, all rights reserved

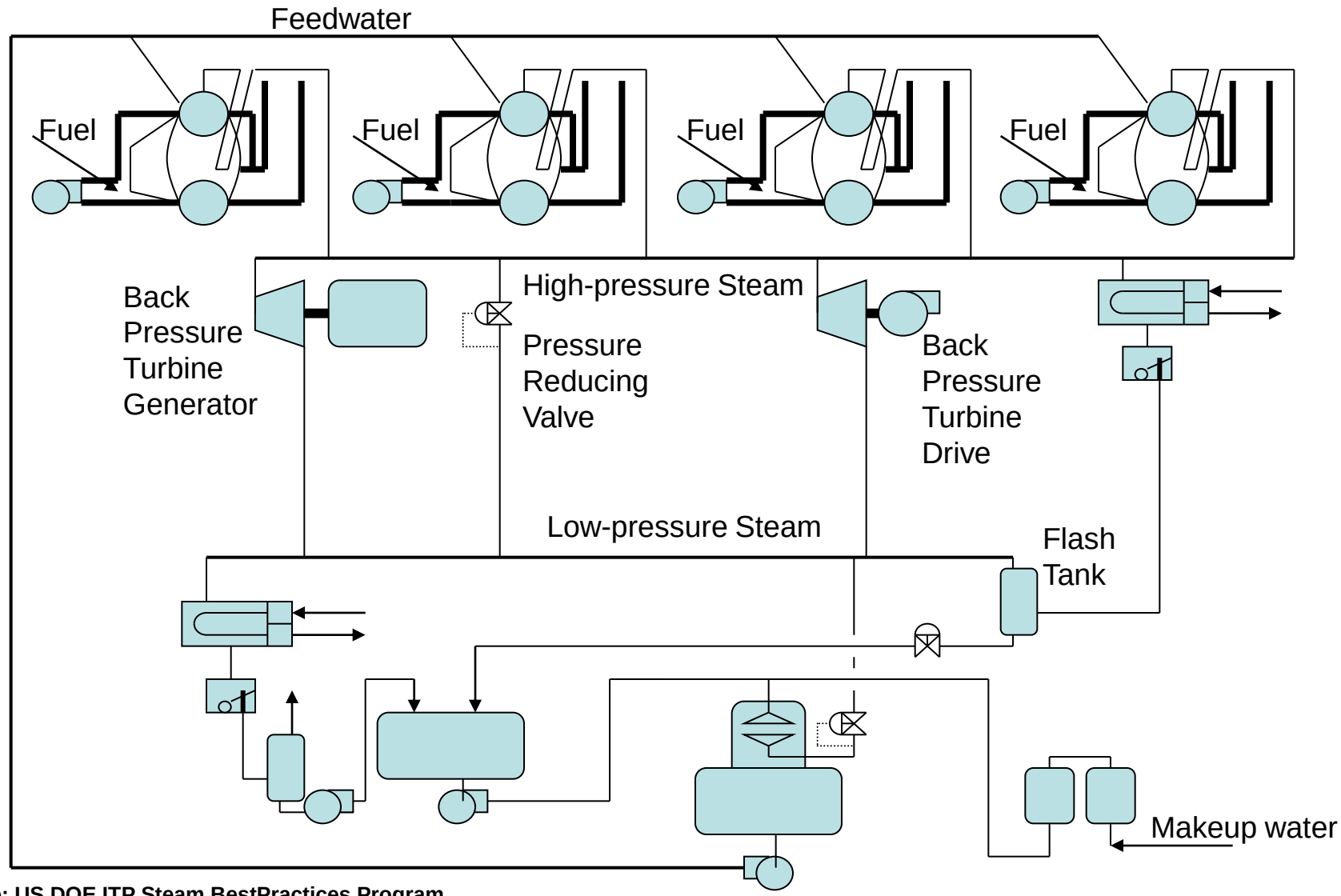

Source: US DOE ITP Steam BestPractices Program

UNIDO 2012, all rights reserved

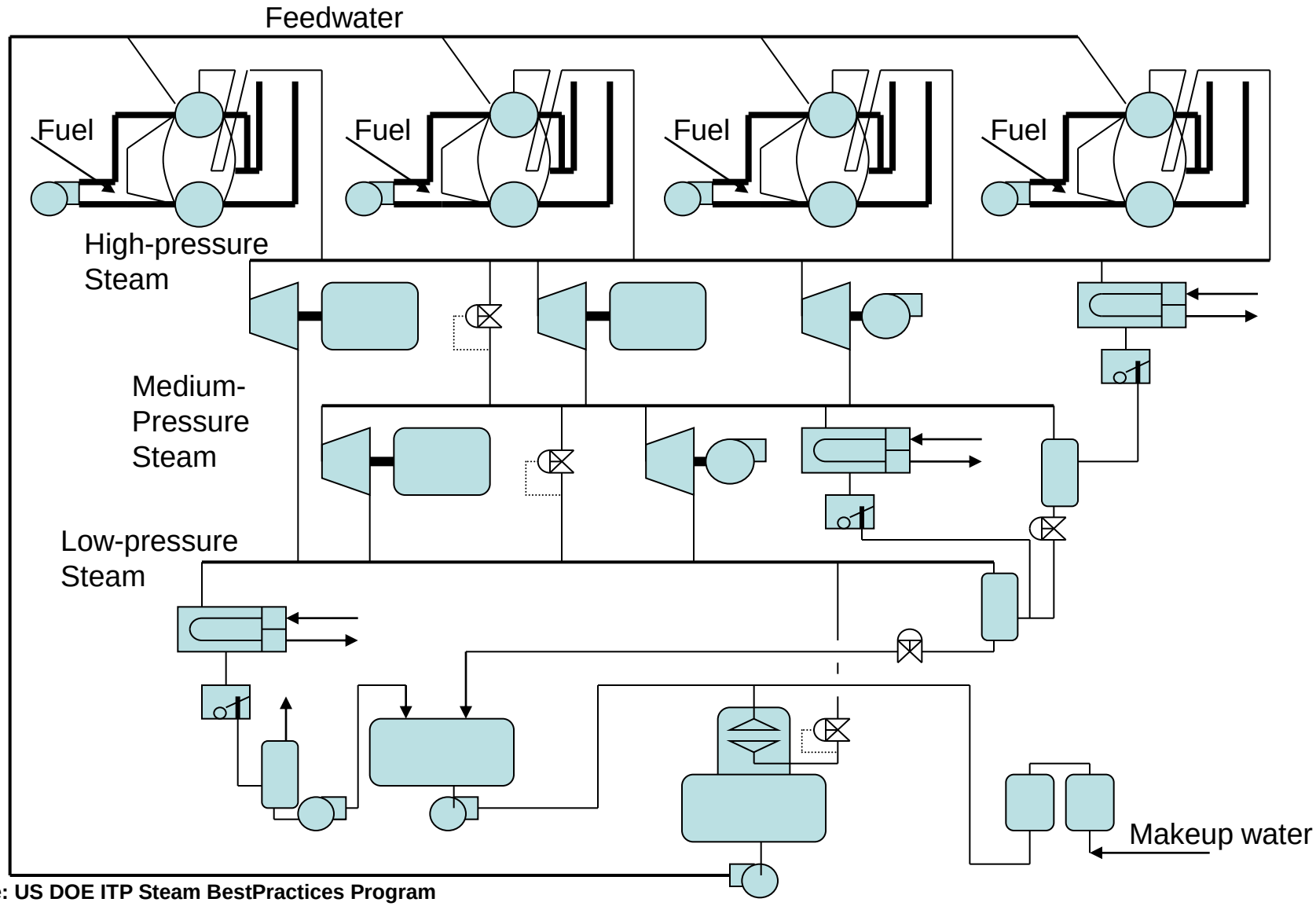

Source: US DOE ITP Steam BestPractices Program

UNIDO 2012, all rights reserved

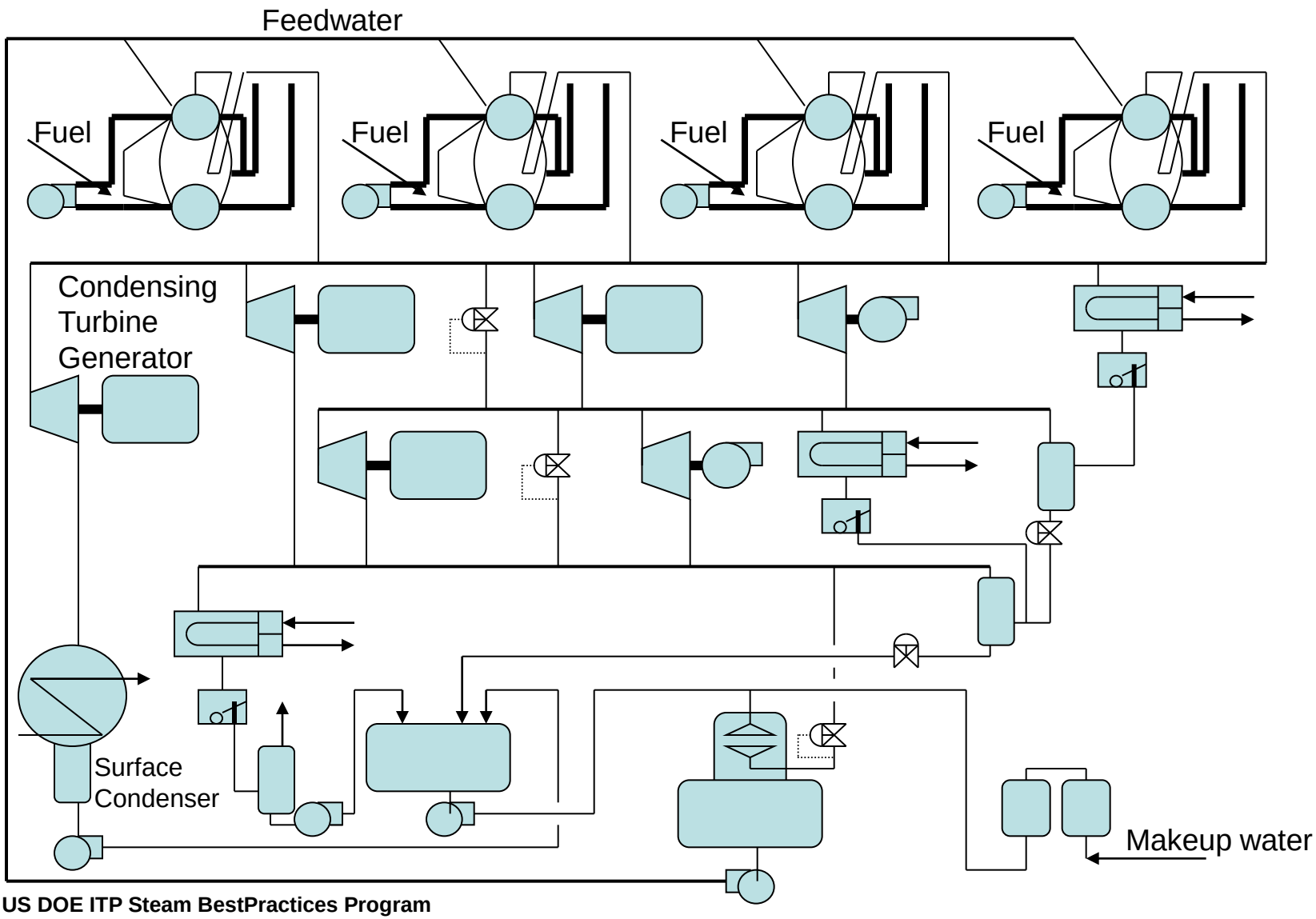

Source: US DOE ITP Steam BestPractices Program

UNIDO 2012, all rights reserved

Steam

- What is STEAM?
  - Saturated or Superheated Water Vapor
- When water is heated to or above it's boiling point, it produces STEAM

Liquid Water

↓

Gaseous Steam

UNIDO 2012, all rights reserved

Steam Thermodynamics

- Thermodynamic States of a Pure Substance
  - Subcooled
    - Liquid (Water)
    - Temperature and Pressure are independent
    - Energy content $\propto$ Temperature
  - Saturated
    - Liquid / 2-Phase / Vapor
    - Temperature and Pressure are **dependent**
    - $0 \leq$ Quality ≤ 1
  - Superheated
    - Vapor (Steam)
    - Temperature and Pressure are independent
    - Energy content $\propto$ Temperature & Pressure

UNIDO 2012, all rights reserved

Steam Thermodynamics

- Thermodynamic Properties of Steam
  - P - Pressure (bars, atmospheres, kPa, MPa)
  - T - Temperature (°C)
    - Absolute Temperature (K)
  - X - Quality
  - ρ - Density (kg/m^3)
  - V - Volume (m^3/kg)
  - H - Enthalpy (kJ, kcal)
    - h - Specific Enthalpy (kJ/kg, kcal/kg)
  - S - Entropy (kJ/K, kcal/K)
    - s - Specific Entropy (kJ/kg-K, kcal/kg-K)

UNIDO 2012, all rights reserved

Steam Thermodynamics

- Thermophysical Properties of Steam
  - C_p - Specific Heat at constant pressure (kJ/kg-K, kcal/kg-K)
  - C_v – Specific Heat at constant volume (kJ/kg-K, kcal/kg-K)
  - V_s - Velocity of sound (m/s)
  - μ - Viscosity (Pa.s)
  - K – Thermal Conductivity (W/m-K)

UNIDO 2012, all rights reserved

Steam Thermodynamics

- Pressure – Temperature Relationship
  - As Pressure ↑ - Temperature ↑

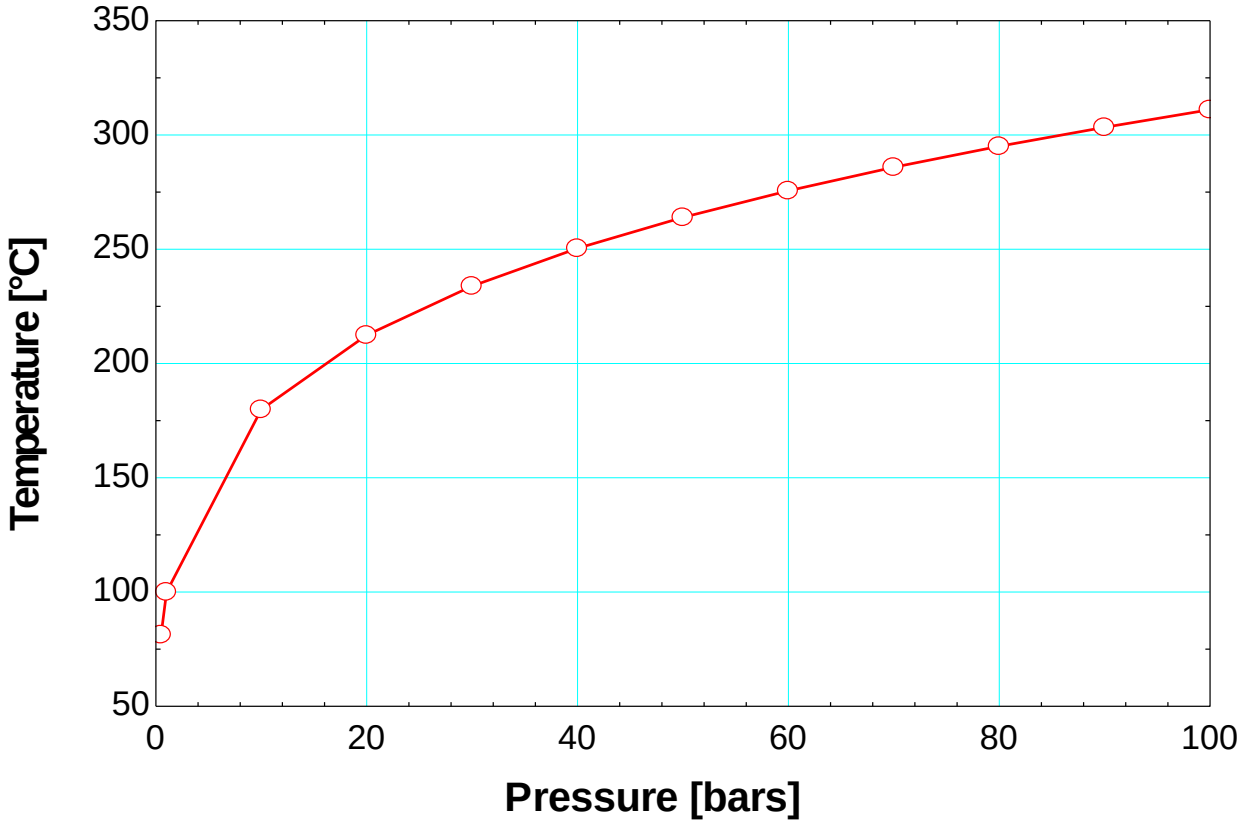

UNIDO 2012, all rights reserved

Steam Thermodynamics

- H-S diagram (Mollier Diagram)

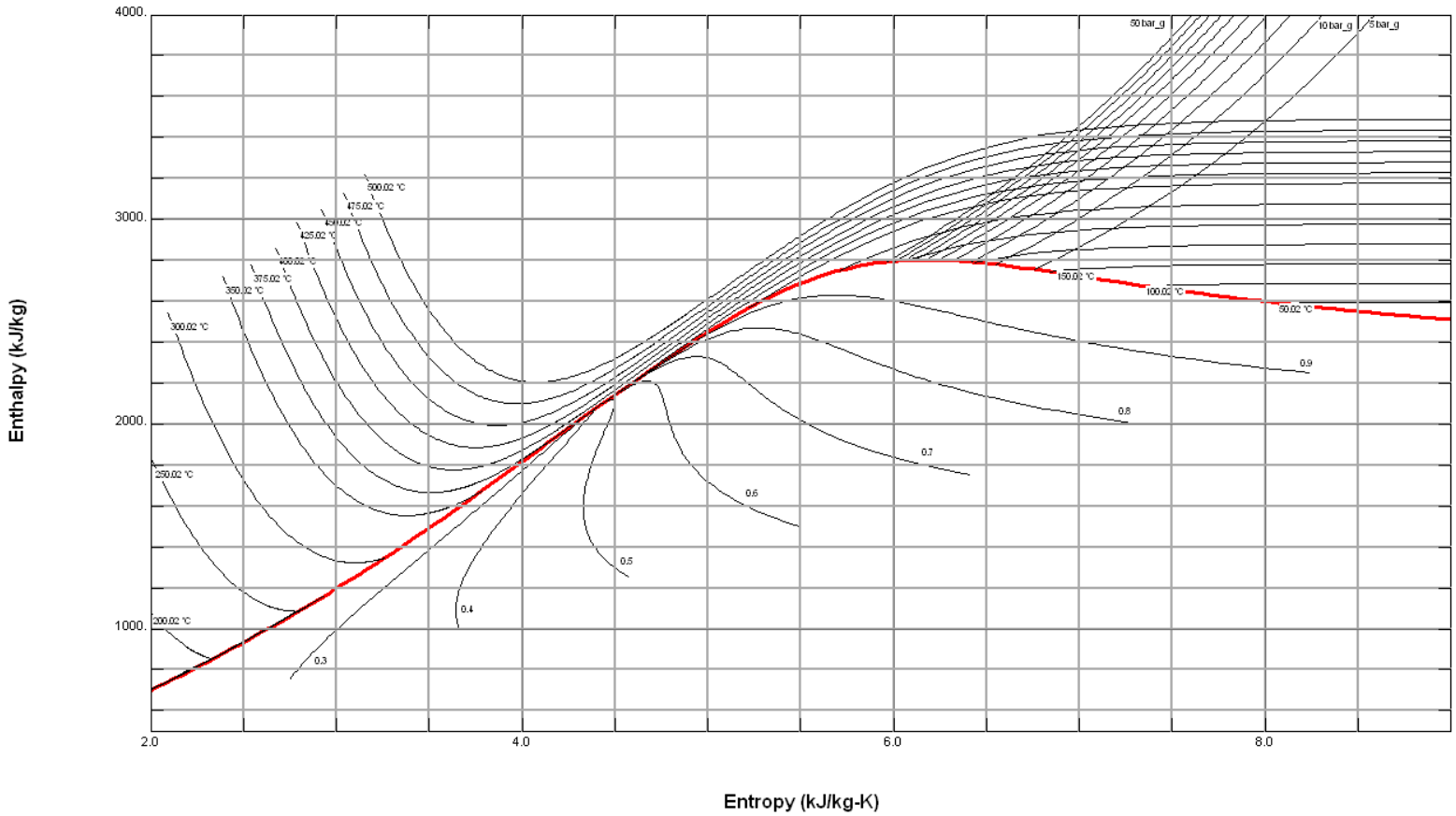

UNIDO 2012, all rights reserved

Steam Thermodynamics

- Steam Tables

p steam (bars)	t steam (C)	Pf (kg/m3)	Vf (m3/kg)	Hf (kJ/kg)	Hfg (kJ/kg)	Hg (kJ/kg)	Sg (kJ/kgK)	Sfg (kJ/kgK)	Sg (kJ/kgK)
0.5	81.31	971	3.244	340.4	2,305	2,676	1.091	6.502	7.593
1.0	100	958.4	1.672	419.2	2,257	2,676	1.307	6.047	7.354
10.0	179.9	887.2	0.1945	762.8	2,015	2,778	2.139	4.447	6.586
20.0	212.4	849.9	0.09962	908.6	1,890	2,799	2.447	3.893	6.34
30.0	233.9	822	0.06667	1,008	1,795	2,803	2.645	3.54	6.186
40.0	250.4	798.5	0.04978	1,087	1,713	2,801	2.796	3.273	6.069
50.0	264	777.5	0.03944	1,154	1,640	2,794	2.92	3.053	5.973
60.0	275.6	758.2	0.03244	1,213	1,571	2,784	3.027	2.862	5.889
70.0	285.9	739.9	0.02737	1,267	1,505	2,772	3.121	2.692	5.813
80.0	295	722.4	0.02352	1,317	1,441	2,758	3.207	2.536	5.743
90.0	303.4	705.4	0.02048	1,363	1,379	2,742	3.285	2.392	5.677
100.0	311	688.6	0.01802	1,407	1,317	2,724	3.359	2.255	5.614

UNIDO 2012, all rights reserved

Steam Thermodynamics

- Steam Properties
  - Steam Tables
    - Mollier Diagrams
  - ASHRAE Fundamentals Handbook
    - Tabulated Data
    - P-h diagram
  - Software Programs
    - Equation of State for different refrigerants
    - Engineering Equation Solver (EES)
  - REFPROP - National Institute of Standards & Testing (NIST)
- Reference Point
  - Maybe different for different sources!!

UNIDO 2012, all rights reserved

Steam System Analysis

- Steady State Steady Flow (SSSF) analysis
  - Neglect the time dependent terms
  - Dynamic responses are not considered
  - Start-up, Shut-down and upset (or trip) conditions are neglected
- Average operating conditions are used
- Seasonality, Production rates can be dealt with “bin analysis” methodology
- IMPACT level-analysis is conducted on systems

UNIDO 2012, all rights reserved

Steam System Analysis

- In order to properly evaluate steam systems the physics of each process must be understood
  - Thermodynamics
  - Heat transfer
  - Fluid flow
- Process measurements
  - Temperatures, Pressures, Flows, etc.
- U.S.DOE Tools Suite
  - Steam System Scoping Tool (SSST)
  - Steam System Assessment Tool (SSAT)
  - Insulation evaluation software – 3E-Plus
- Commercially available software
  - Aspen Tech
  - ProSteam (KBC Linhoff March)
  - Visual MESA, etc.

UNIDO 2012, all rights reserved

Conservation of Mass

- Law: Mass is neither created nor destroyed in the control volume
- Mathematically,
  - Mass flow in = Mass flow out
- Equation format
  - $\Sigma M_{in} = \Sigma M_{out}$
- State of substance & volume flow can change

Steady State Steady Flow

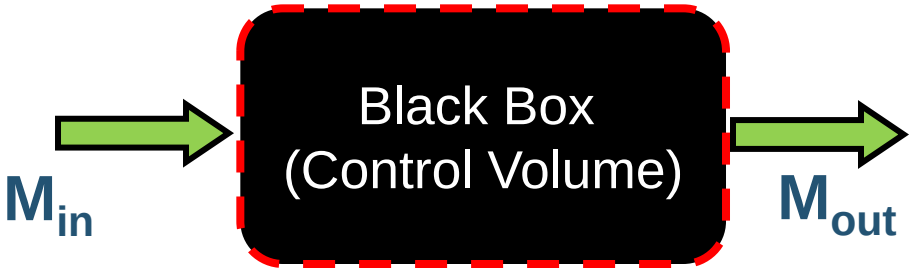

UNIDO 2012, all rights reserved

Example: F1

- A shell and tube heat exchanger is used to heat water using steam
- Water flow rate measured as 600 litres/min
- Steam flow rate is not known

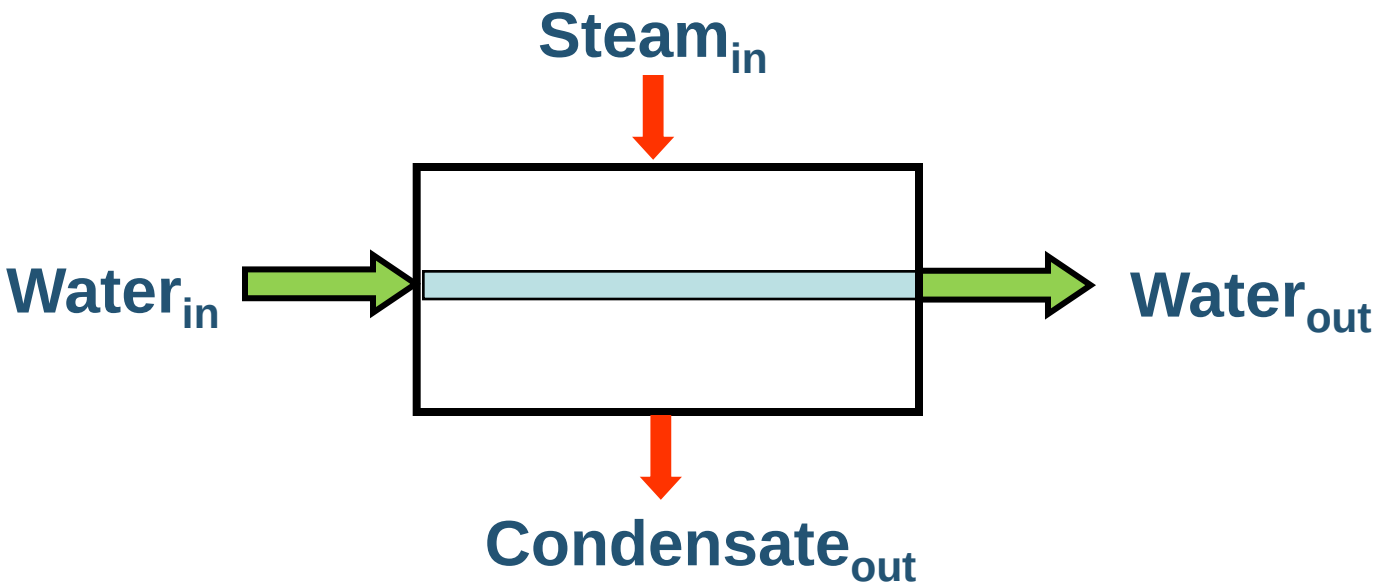

UNIDO 2012, all rights reserved

Example: F1

- Apply Steady State Steady Flow – **Conservation of Mass**
- Water side: Water flow in = Water flow out
- Steam side: Steam flow in = Condensate flow out

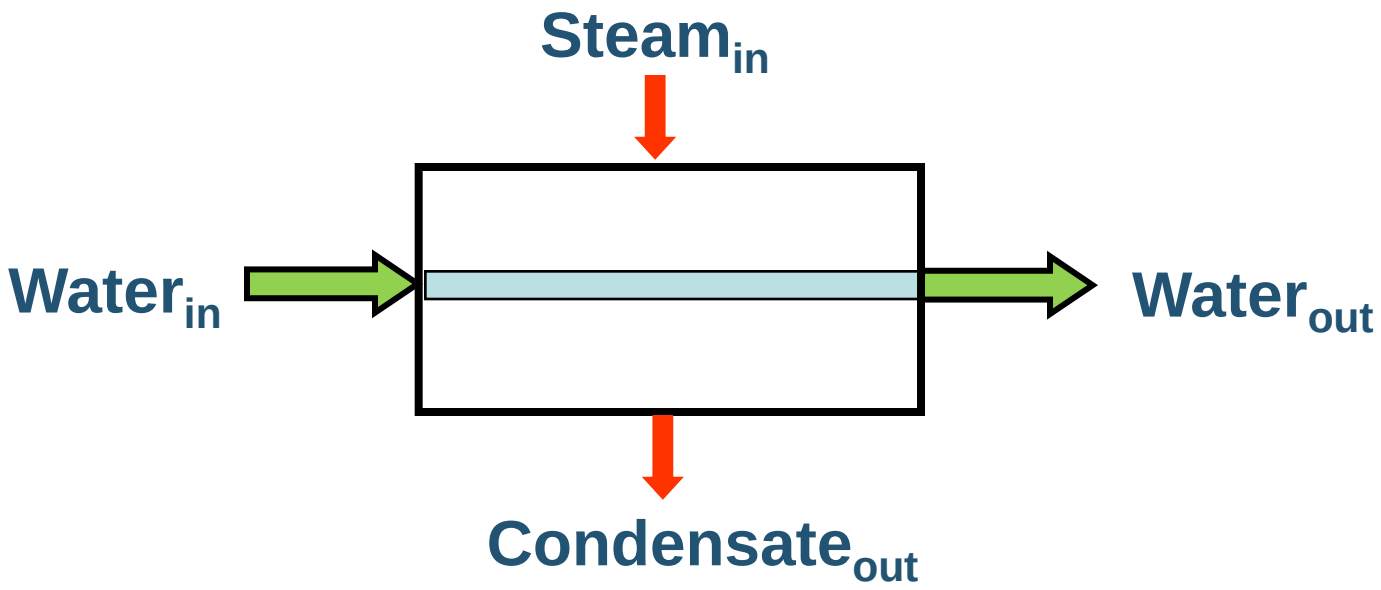

UNIDO 2012, all rights reserved

Example: F1

- Apply Steady State Steady Flow – **Conservation of Mass**
- Water side: Water flow in = 600 litres/min
  = 600 kg/min
  Water flow out = 600 litres/min
  = 600 kg/min
- Steam side: Steam flow in = Condensate flow out

UNIDO 2012, all rights reserved

Conservation of Energy

- Law: Energy can neither be created nor destroyed in the control volume. It can only be changed from one form to another.

- Mathematically,
  - Energy flow in + Heat = Energy flow out + Work

- Equation format
  - $\Sigma M_{in} * h_{in} + Q = \Sigma M_{out} * h_{out} + W$

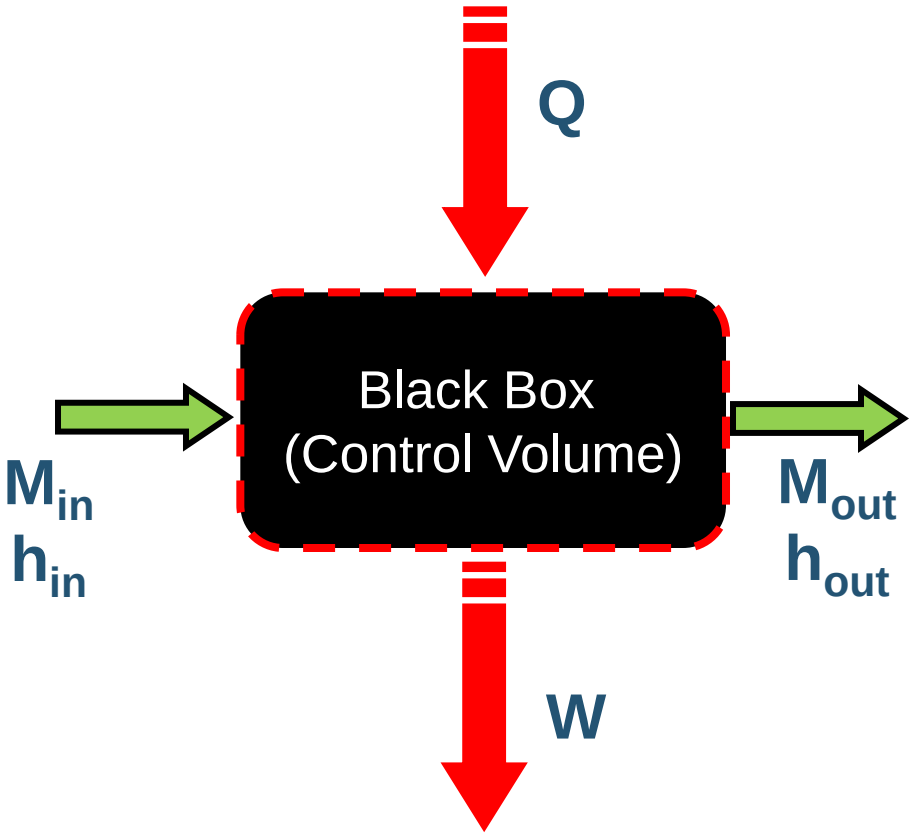

Steady State Steady Flow

UNIDO 2012, all rights reserved

Example: F1

- Water inlet temperature = 25°C
- Water outlet temperature = 75°C
- Specific heat of water = 4.183 kJ/kg-K
- Heat transferred to water = $M_{water} * C_p * (T_{out} - T_{in})$

$$Q = \frac{600}{60} \times 4.183 \times (75 - 25)\, kW$$

$$Q = 2{,}091\, kW$$

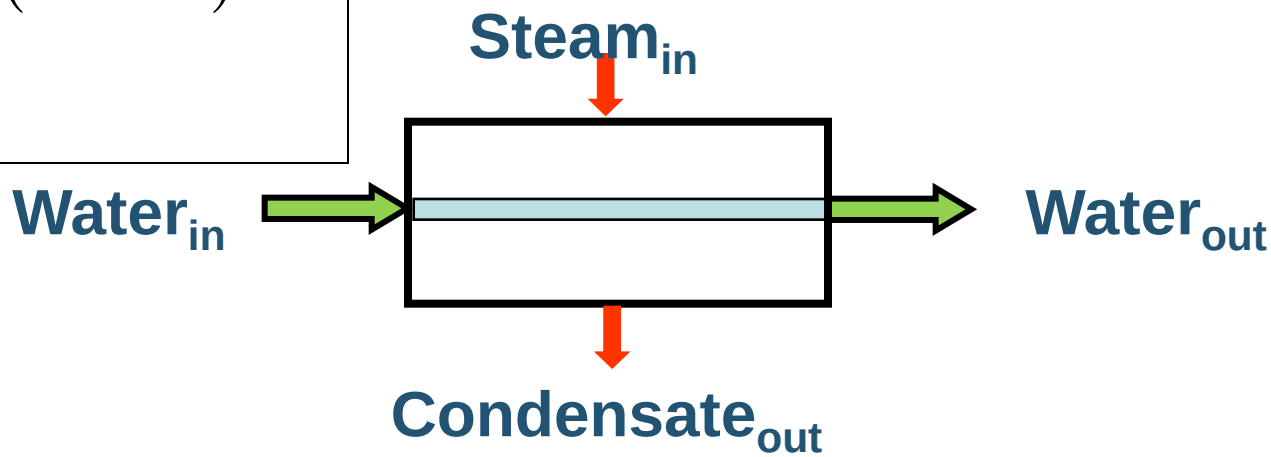

UNIDO 2012, all rights reserved

Example: F1

- Steam inlet conditions: Saturated steam at atmospheric pressure (1.0 bar)
- Condensate outlet conditions: Saturated at T = 100°C
- Heat transferred by steam =

$$M_{steam} * h_{steam} – M_{condensate} * h_{condensate}$$

- No shaft work is done in the control volume: W = 0
- Heat transferred **to** water = Heat transferred **by** steam
- Conservation of Mass: $M_{steam} = M_{condensate}$

UNIDO 2012, all rights reserved

Example: F1

- $Q = M_{steam} * (h_{steam} – h_{condensate})$
- Steam Property tables provide information on steam and condensate enthalpies
- h_{steam} - Saturated steam at 1.0 bar = 2,676 kJ/kg
- $h_{condensate}$ – Sat. Condensate at 100°C = 419 kJ/kg

$$Q = M_{steam} \times (2{,}676 - 419)$$

$$2{,}091 = M_{steam} \times (2{,}257)$$

$$M_{steam} = 0.927 \frac{kg}{s} = 3{,}336 \frac{kg}{h} = 3.34\,Tph$$

UNIDO 2012, all rights reserved

Example: F1

Pressure (bars)	t sat (C)	Quality	Enthalpy (kJ/kg)
0.5	81.3	0	340.4
0.5	81.3	1	2,645
1.013	100.0	0	419
1.013	100.0	1	2,676
1.5	111.4	0	467.1
1.5	111.4	1	2,693
2	120.2	0	504.7
2	120.2	1	2,707
2.5	127.4	0	535.4
2.5	127.4	1	2,717

Saturated Liquid

Saturated Vapor (Dry Steam)

UNIDO 2012, all rights reserved

Example: F1

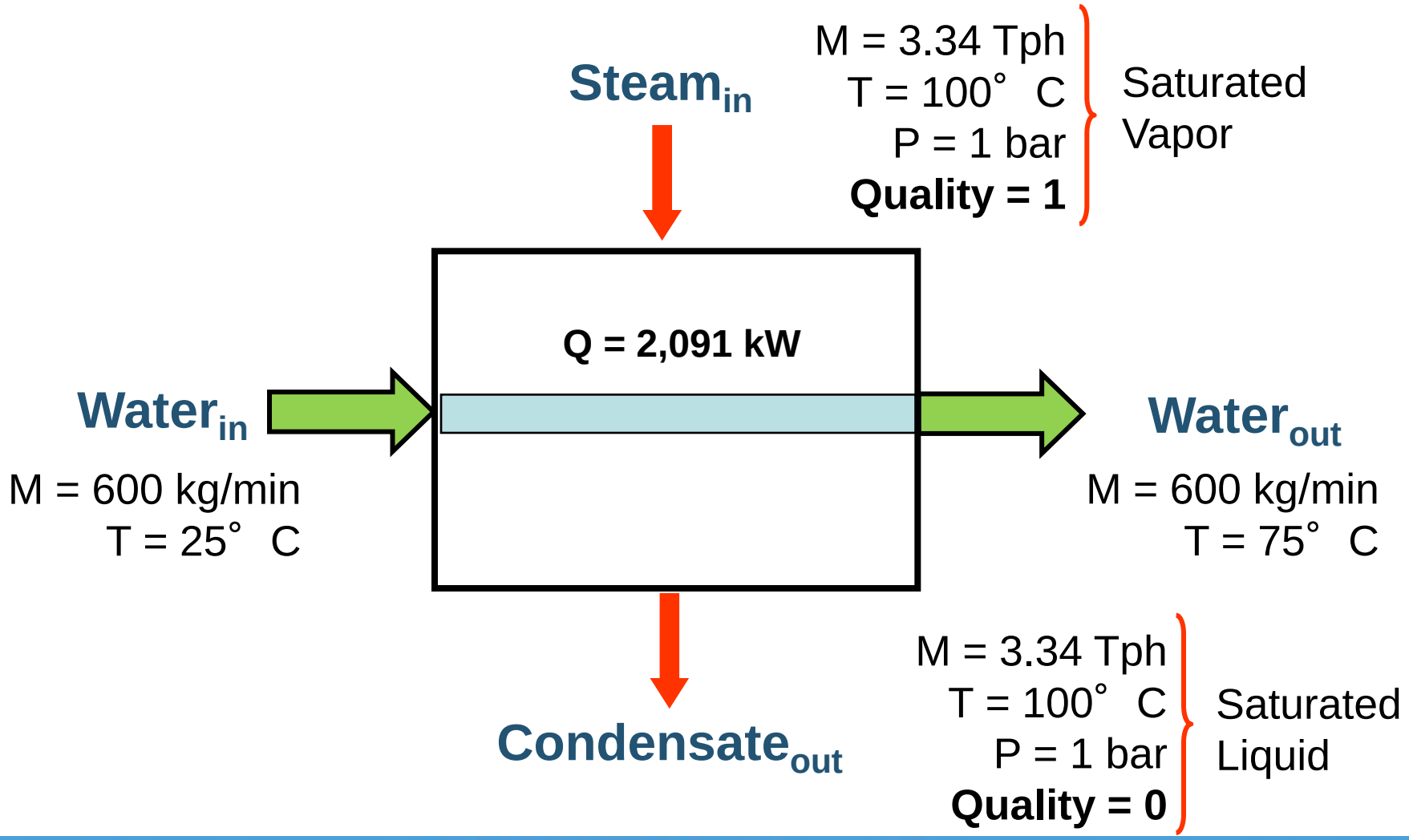

UNIDO 2012, all rights reserved

Example: F2

- Steam is directly injected in a vessel to heat water
- Water flow rate required (& measured) by process is 600 litres/min
- Steam flow rate is unknown

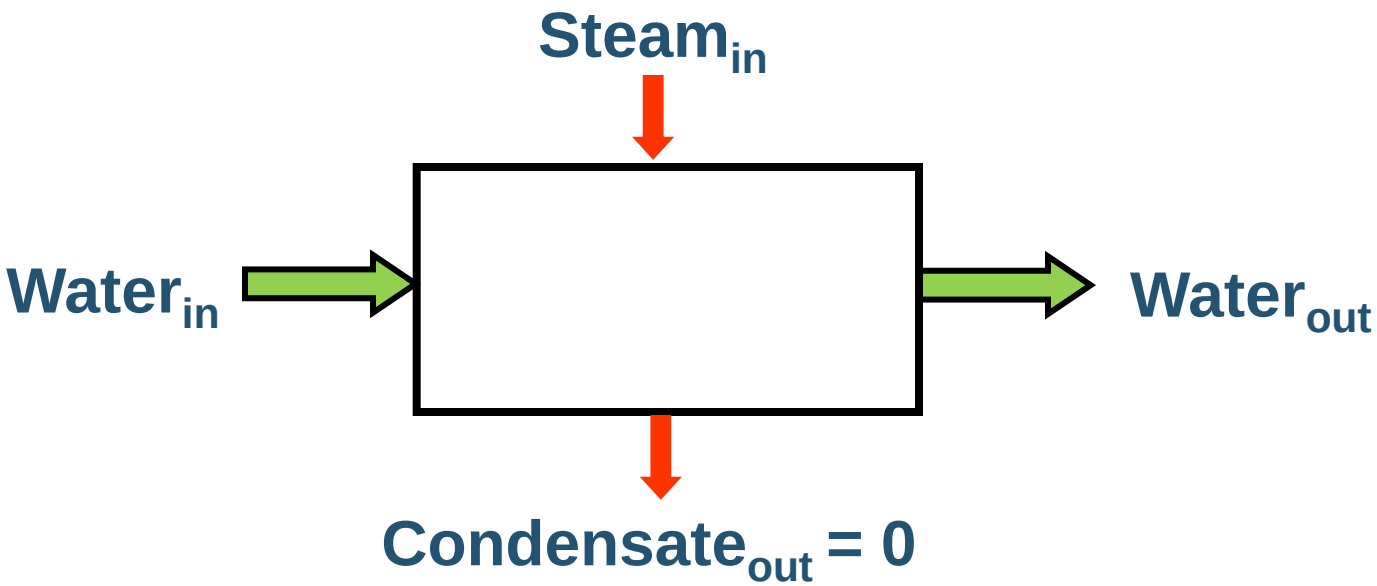

UNIDO 2012, all rights reserved

Example: F2

- Apply Steady State Steady Flow – **Conservation of Mass**
- Water flow in + Steam flow in = Water flow out

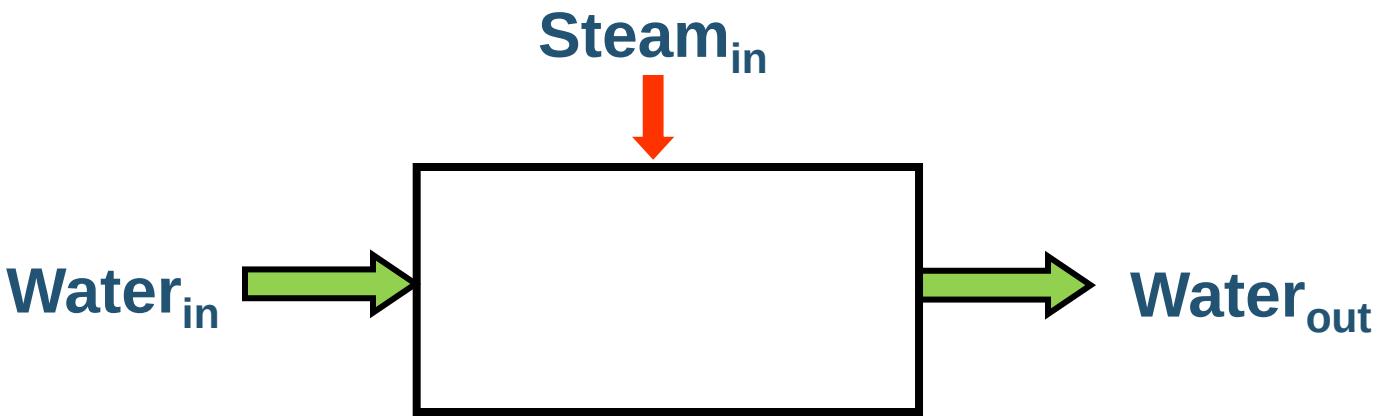

UNIDO 2012, all rights reserved

Example: F2

- Apply Steady State Steady Flow – Conservation of **Mass**

- Water flow in = $M_{waterin}$ = unknown

  Steam flow in = M_{steam} = unknown

- Water flow out = $M_{waterout}$
  = 600 litres/min
  ~ 600 kg/min

- $M_{waterin} + M_{steam} = M_{waterout}$ ….Eqn 1

UNIDO 2012, all rights reserved

Example: F2

- Water inlet temperature = 25°C
- Water outlet temperature = 75°C
- Steam inlet conditions: Saturated steam at atmospheric pressure (1.0 bar)
- No shaft work is done in the control volume: W = 0
- Apply Steady State Steady Flow - Conservation of **Energy**

$$M_{waterin} * h_{waterin} + M_{steam} * h_{steam} = M_{waterout} * h_{waterout} \quad ..Eqn\ 2$$

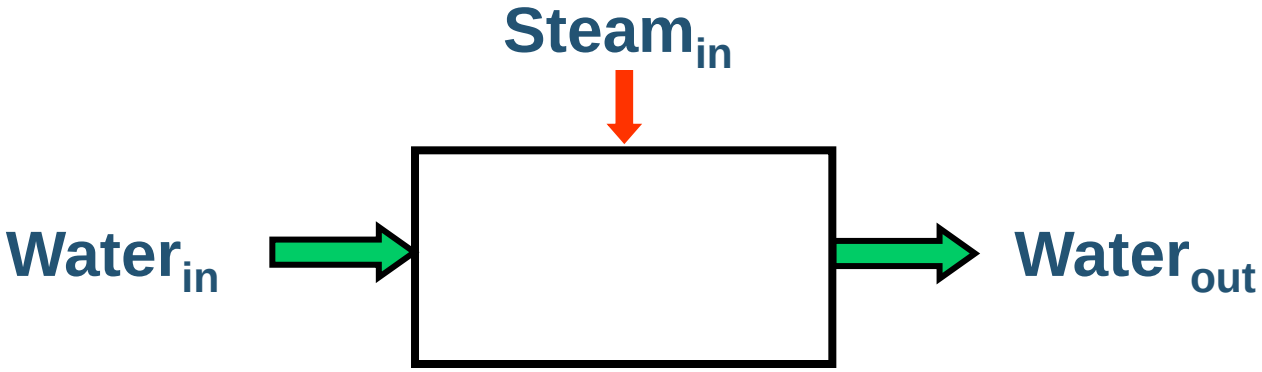

UNIDO 2012, all rights reserved

Example: F2

- Steam Property tables provide information on steam and sub-cooled water enthalpies
- $h_{waterin}$ - Subcooled water (1.0 bar, 25°C) = 104.8 kJ/kg
- h_{steam} - Saturated steam at 1.0 bar = 2,676 kJ/kg
- $h_{waterout}$ – Subcooled water (1.0 bar, 75°C) = 314 kJ/kg

Pressure i (bars)	Temp i (C)	Quality i	Enthalpy i (kJ/kg)	Density i (kg/m3)
1.013	25.0	-100	104.8	997.1
1.013	75.0	-100	314	974.9
1.013	100.0	1	2,676	0.597

UNIDO 2012, all rights reserved

Example: F2

- Equation 1 is now written as

$$M_{waterin} + M_{steam} = M_{waterout}$$

$$M_{waterin} + M_{steam} = \frac{600}{60} \times \frac{974.9}{1{,}000}$$

$$M_{waterin} + M_{steam} = 9.75$$

$$M_{waterout} = 9.75 \frac{kg}{s}$$

UNIDO 2012, all rights reserved

Example: F2

- Equation 2 can now be written as

$$M_{waterin} \times (104.8) + M_{steam} \times (2{,}676) = M_{waterout} \times (314)$$
$$M_{waterin} \times (104.8) + M_{steam} \times (2{,}676) = 9.75 \times (314)$$
$$M_{waterin} \times (104.8) + M_{steam} \times (2{,}676) = 3{,}061.5$$

- Solving equations 1 and 2 simultaneously provides

$$M_{waterin} = 8.96 \frac{kg}{s} = \frac{8.96}{997.1} \times 1{,}000 \times 60 \frac{l}{\text{min}} = 539 \frac{\text{litres}}{\text{min}}$$
$$M_{steam} = 0.793 \frac{kg}{s} = 2{,}855 \frac{kg}{h} = 2.85\, Tph$$

UNIDO 2012, all rights reserved

Example: F2

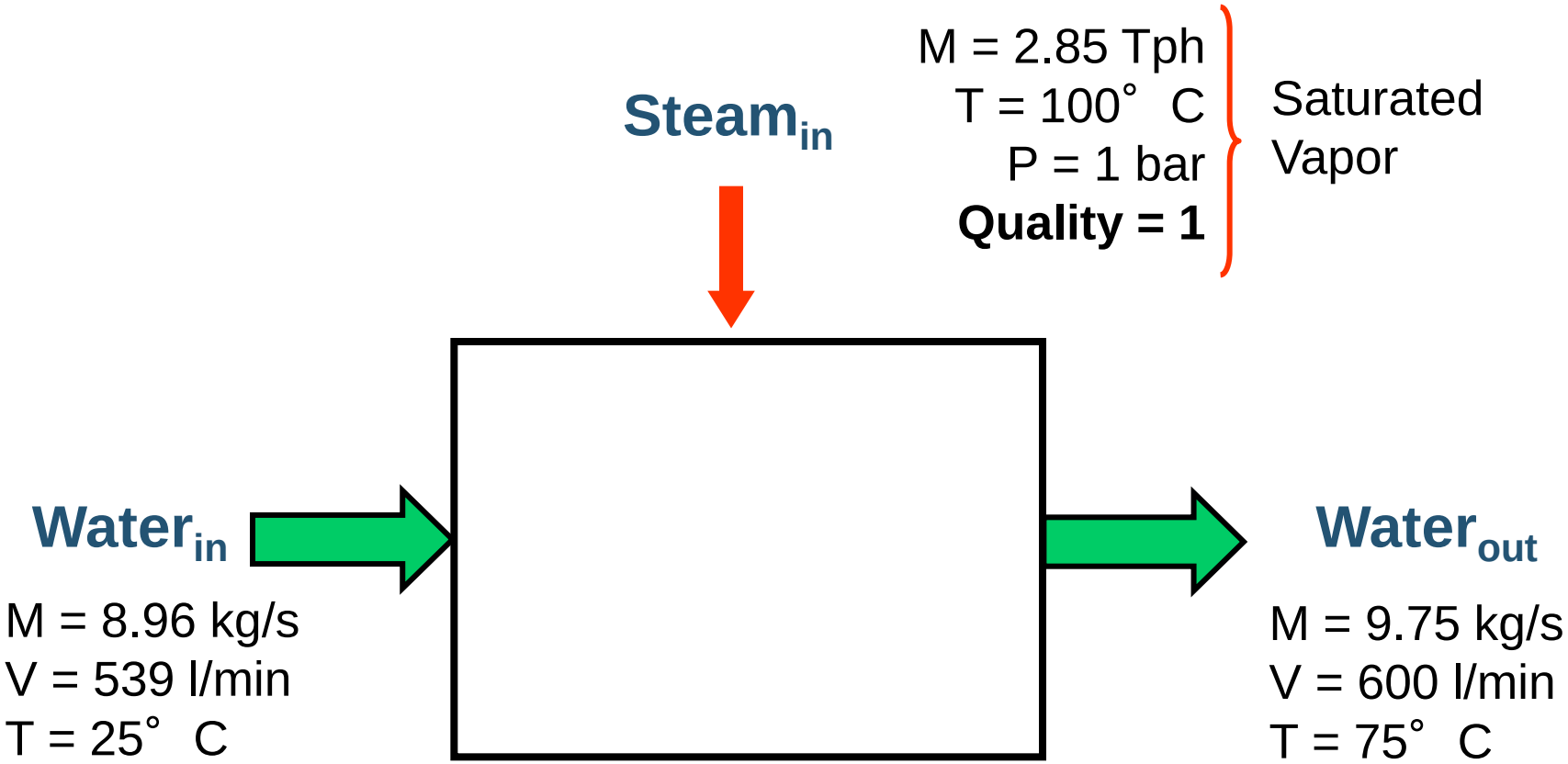

UNIDO 2012, all rights reserved

Key Points / Action Items

1. *Use a Systems Approach to optimize steam systems*
2. *There are four major areas of a steam system – Generation, Distribution, End-Use & Recovery*
3. *An understanding of the laws of thermodynamics, heat transfer, fluid flow and steam properties is required for a steam system analysis*
4. *Steam is used all across the industry to do various tasks and is the most effective medium to transport energy and produce shaft work (or power)*

UNIDO 2012, all rights reserved